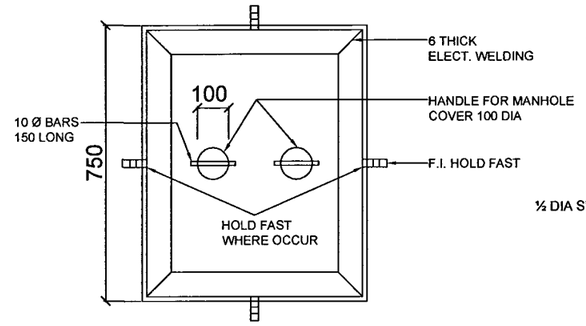

PLAN OF MANHOLE FRAME

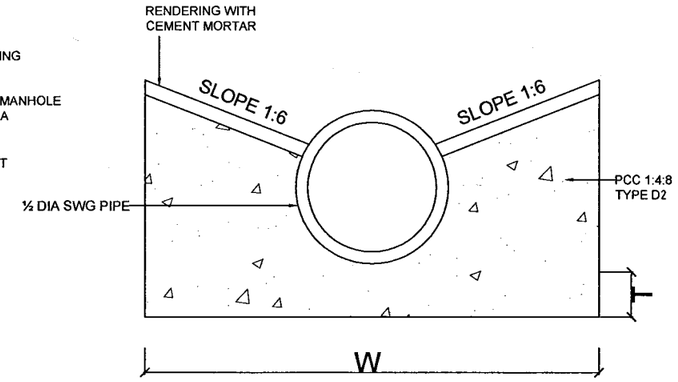

DETAIL OF BENCHING

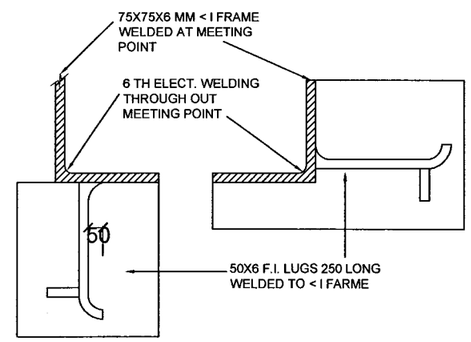

FIXING DETAIL OF MANHOLE FRAME

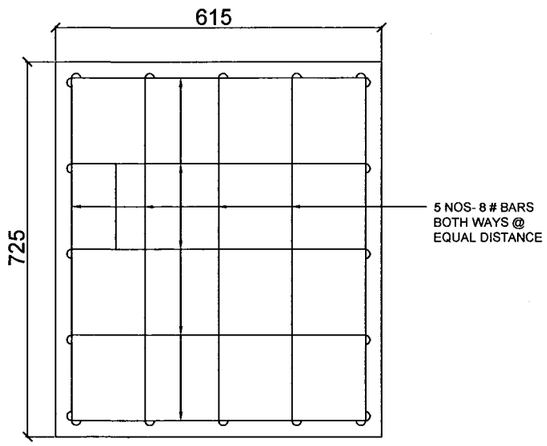

RCC DETAIL OF MANHOLE COVER SLAB
75 TH. (RECTANGULAR)

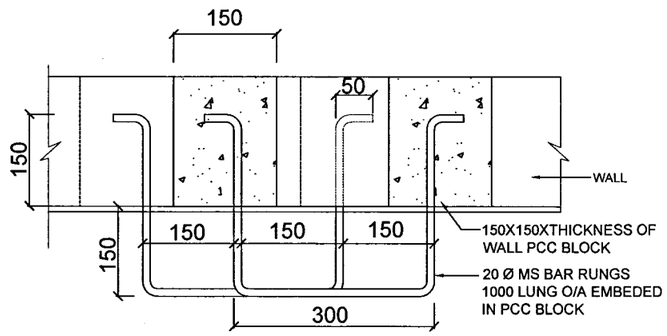

DETAILD SECTIONAL PLAN (FIXING
DETAIL OF MS RUNGS)

T =100 FOR DIA < = 150
W = D + 300, T = 150 " " >150
WHERE D=EDT DIA OF PIPE
BED CONC. PCC(1:4:8)(TYPE D2)
FOR SWD/CONC. PIPES
COMPACTED HARD CORE FOR
PVC PIPES, COMPACTED EARTH
FOR CI PIPES

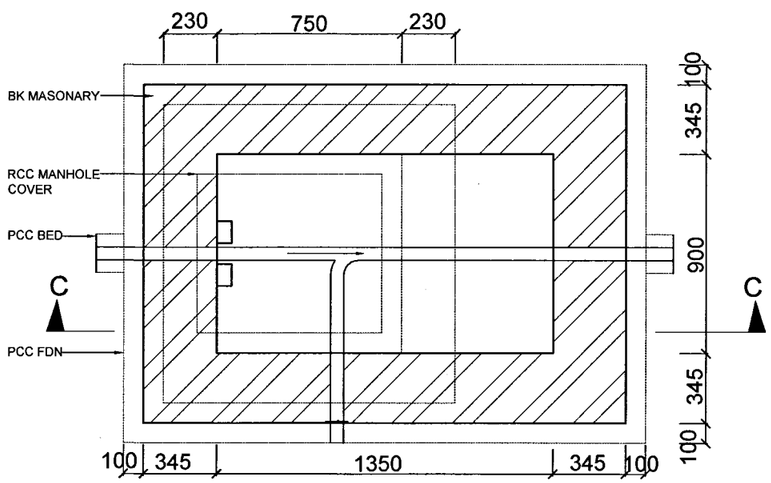

PLAN OF MANHOLE/TYPE-III
DEPTH UPTO 2110 TO 3500

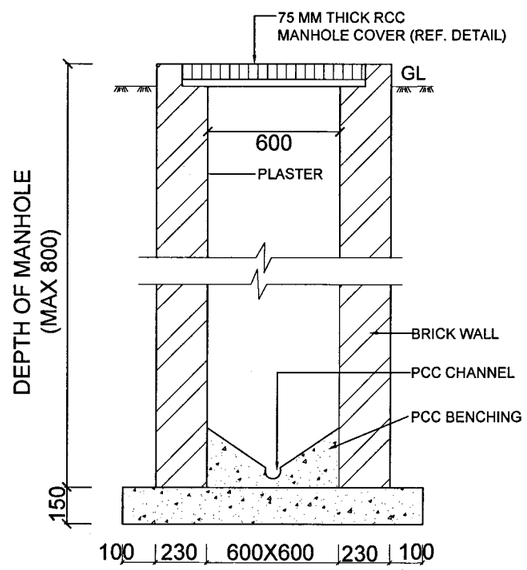

SECTION AT A-A

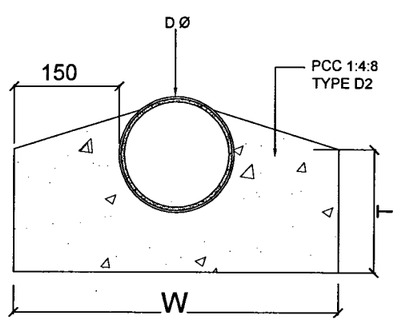

DETAIL OF HAUNCHING

NOTES

FOR NOTES 1 TO 10 REFER SHT NO. ½ OF THIS DRG

11. WHENEVER TWO OR MORE SEWERS MEET AT MANHOLE THE DEPTH OF MANHOLE SHALL BE FIXED AS PER GRADIENT OF LOWEST SEWER AND
12. SHALL BE GIVEN FOR UPPER SEWER.

THE FIRST MANHOLE TO BE PROVIDED NEAR BLDG. SHALL BE TERMED AS INSPECTION CHAMBER (I.C.) THIS IC SHALL
13. BE AT MIN. DISTANCE OF 1.5 MTR FROM OUTER FACE OF EXT. WALL.

FOR STONE MASONARY COST THICKNESS OF WALL SHALL BE AS FOLLOW
& IN SIDE DIMENTION SHALL BE KEPT INTACT

14. FOR	READ	FOR	READ
1 BK	380	2 BK	600
1½ BK	460		

SPECIFICATIONS OF MH & IC

A) FOUNDATIONS,	PCC(1:4:8) TYPE D2
B) WALLS -	BRICK WORK IN CM(1:4)
C) PCC CHANNELS	PCC 1:3:6 FAIR FINISH WITH EXTRA CEMENT
D) COPING	PCC (1:2:4) B-1 TYPE AS SHOWN IN <1
15. FRAME	
E) COVER	RCC (1:2:4) B-1 TYPE REINFORCED AS
16. SHOWEN IN DRG.	
F) FINISHES	INTERNALLY 15 MM TH. PLASTER IN CM 1:4 FAIR
	FINISHED WITH EXTRA CEMENT & EXTERNALLY
	FLUSH POINTED AS THE WORK PROCEEDS.

SWG/RCC PIPES TO BE JOINTED IN CEMENT MORTER (1:1)

THIS DWG IS BASED ON DRG NO. CEUZ/TD-1133/97 SHT NO- ½

S.NO.	DATE	DESCRIPTION	INITIAL
		REVISON	

SEWER APPURTENANCES

DETAIL OF MANHOLE

DETAILS

DATE	12-01-15	CHIEF ENGINEER UDHAMPUR ZONE	SHT. NO. 2/2
DRN	Geeta		
TCD			
CKD			
SCALE		DRG. NO. CEUZ/TD/1522/15	

AAD (ARCH)

DY ARCH

LT COL
SR ARCHITECT
FOR CHIEF ENGINEER

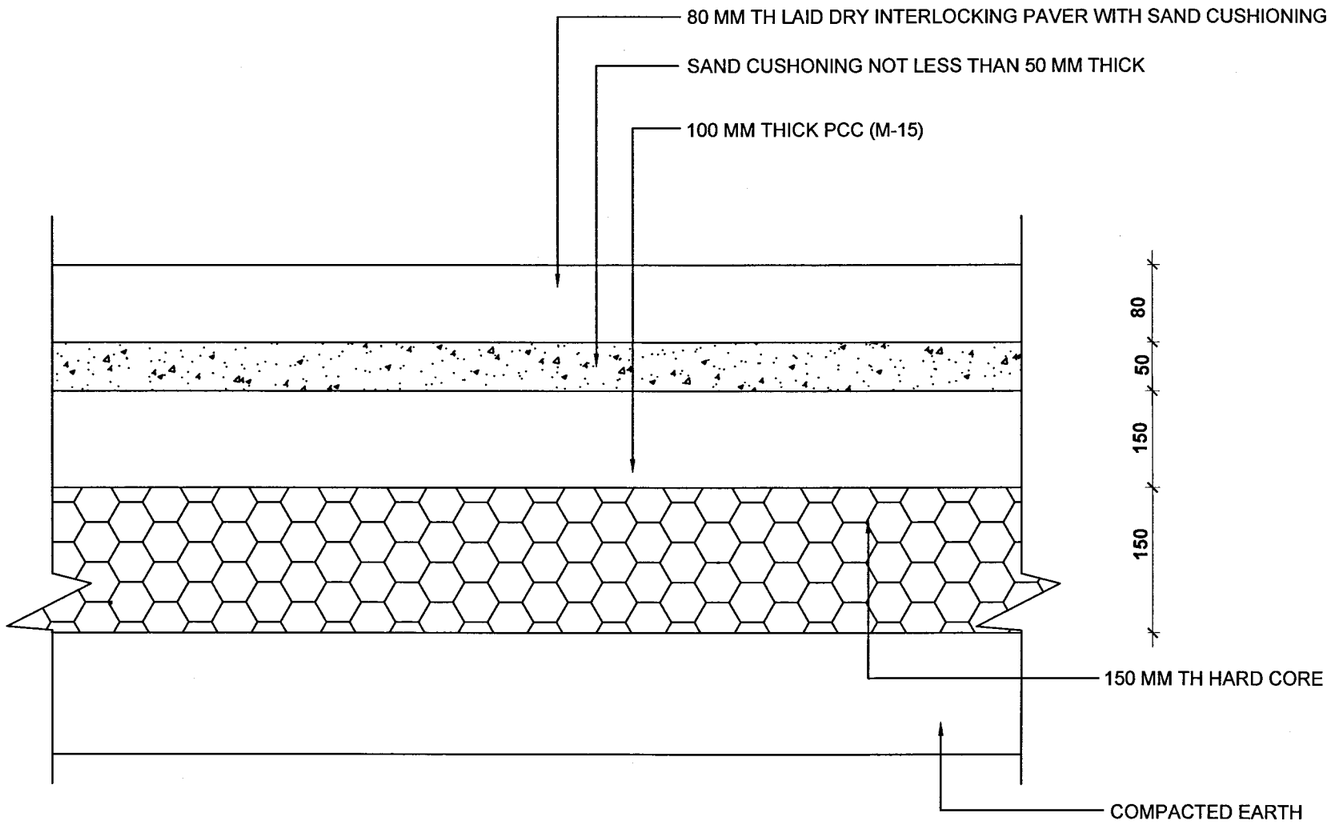

DETAILS OF HARD STANDING(HEAVY DUTY)80/100 THICK INTERLOCKING TILES / PAVERS

REFERENCES TO DRAWINGS

S NO	DRG NO.	SHT NO	DESCRIPTION
01	CEUZ/TD-1523/15	1/1	TYPICAL CROSS SECTION OF HARD STANDING

NOTES

1. CONTRACTOR TO CHECK & VERIFY ALL DIMENSIONS BEFORE TAKING EXECUTION OF THE WORK.
2. FIGURED DIMENSIONSSHALL BE FOLLOWED.
3. DIMENSIONS GIVEN ARE IN MILIMETRES UNLESS OTHERWISE STATED.
4. CONSTRUCTION TO BE DONE AS PER GUIDELINES OF IS 15658;2006

PROVN OF HARD STANDING

TYP X - SEC OF HARD STANDING

DATE	12-01-15	CHIEF ENGINEER UDHAMPUR ZONE	SHT. NO.
DRN	GEETA		1/1
TCD			
CKD			
SCALE		DRG. NO. CEUZ/TD/1523/15	

SO-II (DESIGN)

SO-I (DESIGN)
FOR CHIEF ENGINEER

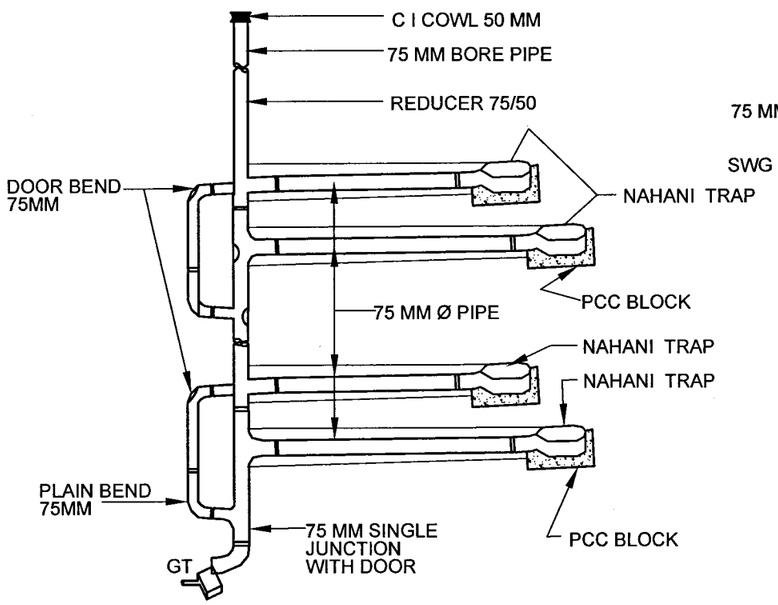

C I FITTING AND STACK

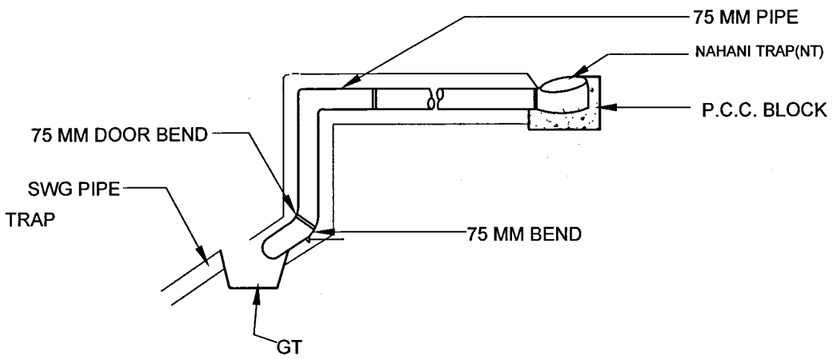

TYPICAL SINGLE STACK COVERING DISPOSAL WASTE WATER ONLY APPLICABLE FOR KITCHEN

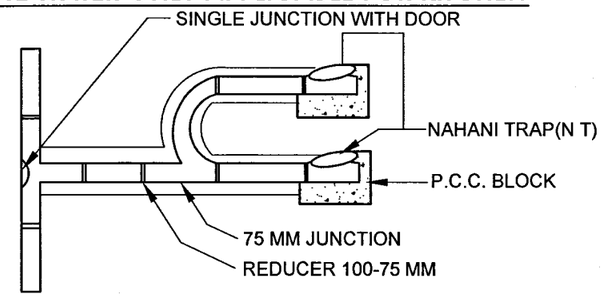

DETAIL IN CASE OF CONNECTION BETWEEN NAHANI TRAPS JUST BEFORE JOINING STACK

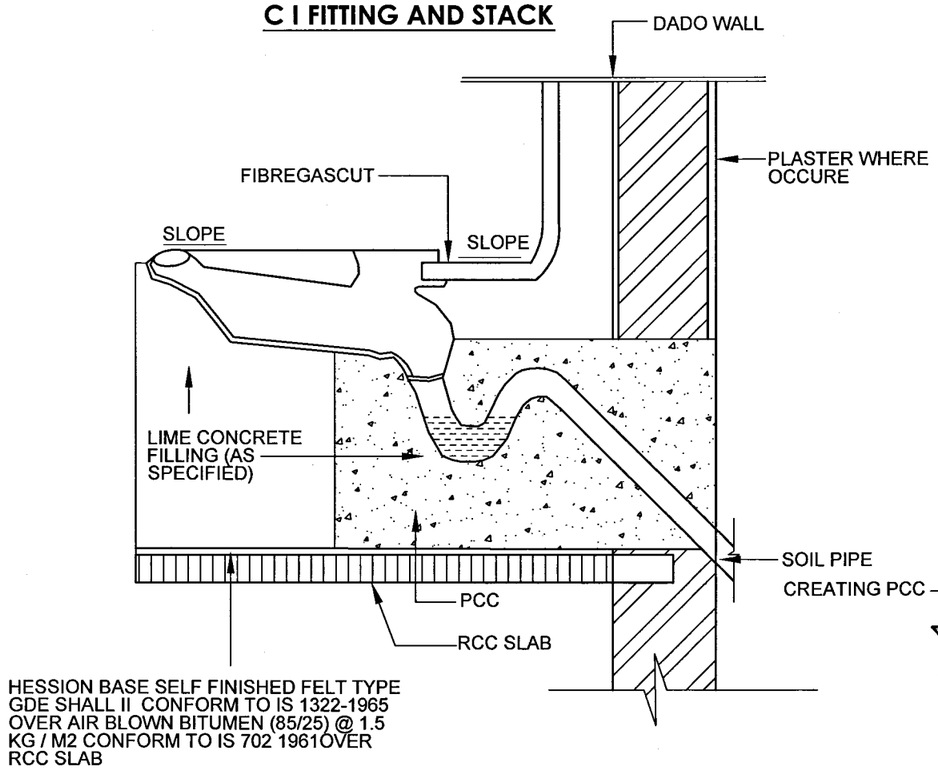

SECTION THROUGH WC SHOW IN WATER PROOFINGOF UPPER FLOOR SLAB

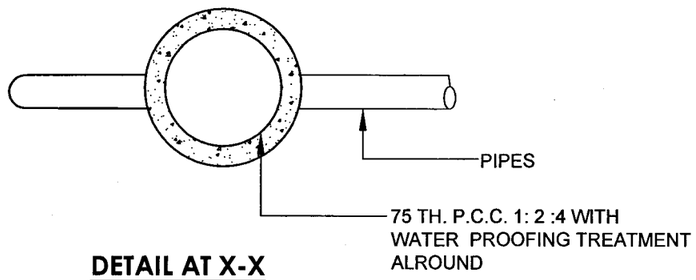

DETAIL AT X-X

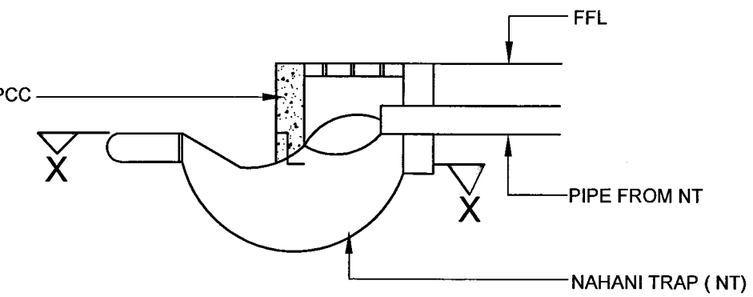

DETAIL SHOWING DISPOSAL OF WASTE WATER FROM ONE NT THROUGH ANOTHER NT

NOTES

1. CONTRACTOR TO CHECK AND VERIFY ALL DIMENSIONS BEFORE EXECUTION OF THE WORK.
2. FIGURED DIMENSIONS SHALL BE FOLLOWED.
3. ALL DIMENSIONS GIVEN ARE IN MILLIMETRES. UNLESS OTHER WISE SHOWN
4. JOINTING OF ALL PIPES AND FITTINGS SHALL CARRIED OUT AS SPECIFIED IN THE CONTRACT

SL No	DATE	DISCRIPTION	INITIAL

R E V I S I O N S

TYPICAL DETAILS SHOWING SOIL WASTE PIPE CONNECTIONS.

DATE	12-01-15	CHIEF ENGINEER UDHAMPUR ZONE	SHT. NO. 1/2
DRN	SURESH		
TCD			
CKD			
SCALE		DRG. NO. CEUZ/TD/1530/15	
AAD (ARCH)		LT COL SR ARCHITECT FOR CHIEF ENGINEER	
DY ARCH			

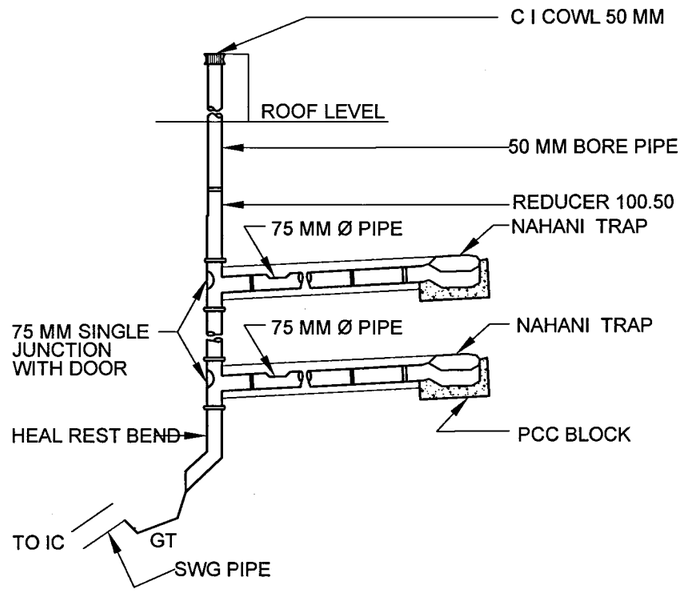

TYPICAL SINGLE STACK COVERING DISPOSAL WASTE WATER ONLY
(APPLICABLE TO KITHEN D/S ONWARDS)

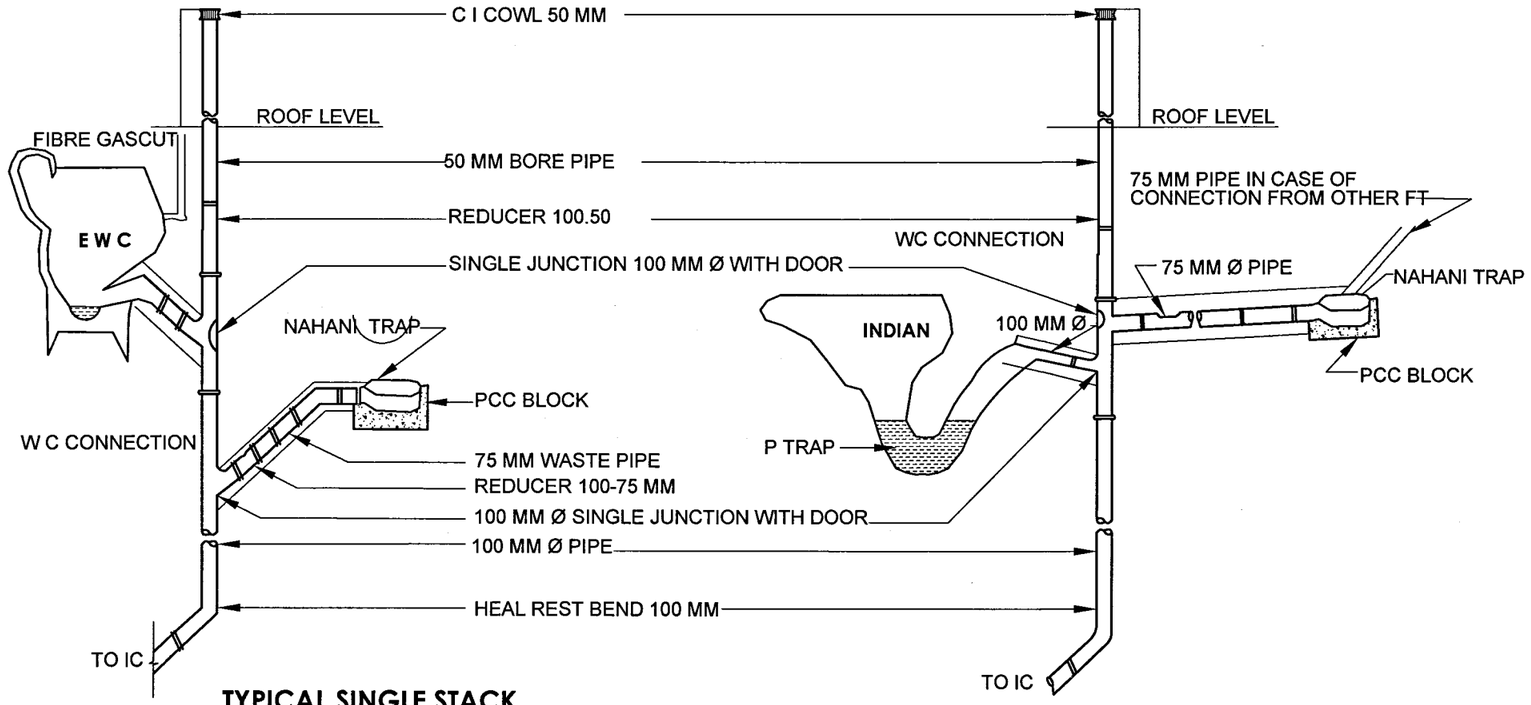

TYPICAL SINGLE STACK SYSTEM (WESTERN STYLE)

TYPICAL SINGLE STACK SYSTEM (INDIAN PRACTICE)

ARCHITECT SECTION

NOTES:-

1 FOR NOTES REF SHEET NO 1/2 OF THIS DRG.

SL No	DATE	DISCRIPTION	INITIAL

R E V I S I O N S

TYPICAL DETAILS SHOWING SOIL WASTE PIPE CONNECTIONS.

DATE	12-01-15	CHIEF ENGINEER UDHAMPUR ZONE	SHT. NO. 2/2
DRN	SURESH		
TCD			
CKD			
SCALE		DRG. NO. CEUZ/TD/1530/15	

AAD (ARCH)

DY ARCH

LT COL
SR ARCHITECT
FOR CHIEF ENGINEER

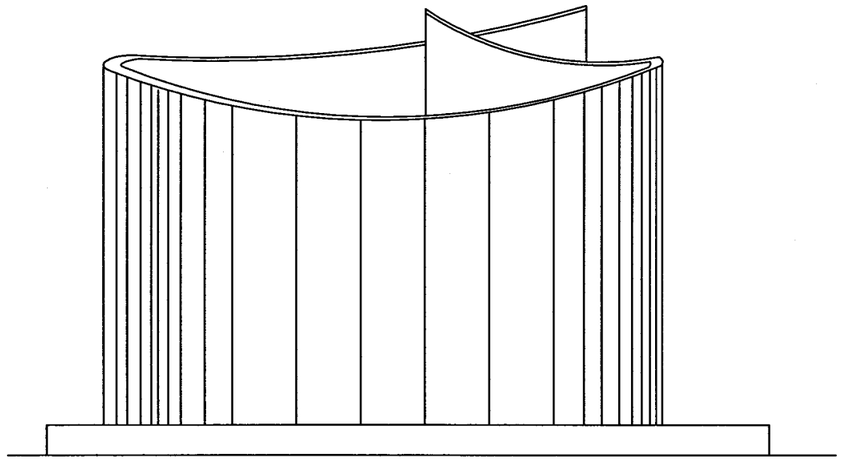

ELEVATION

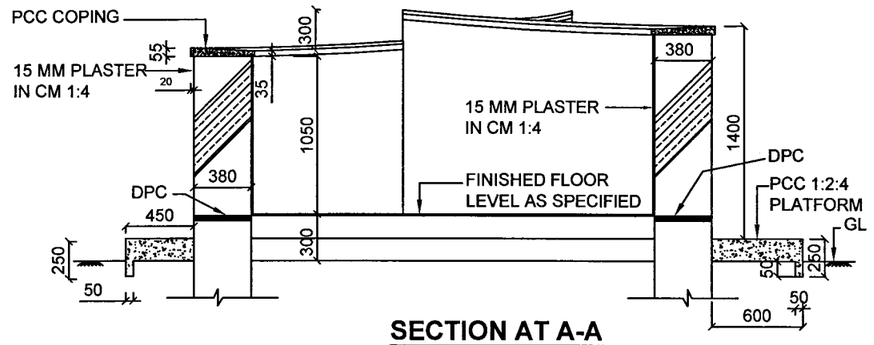

SECTION AT A-A

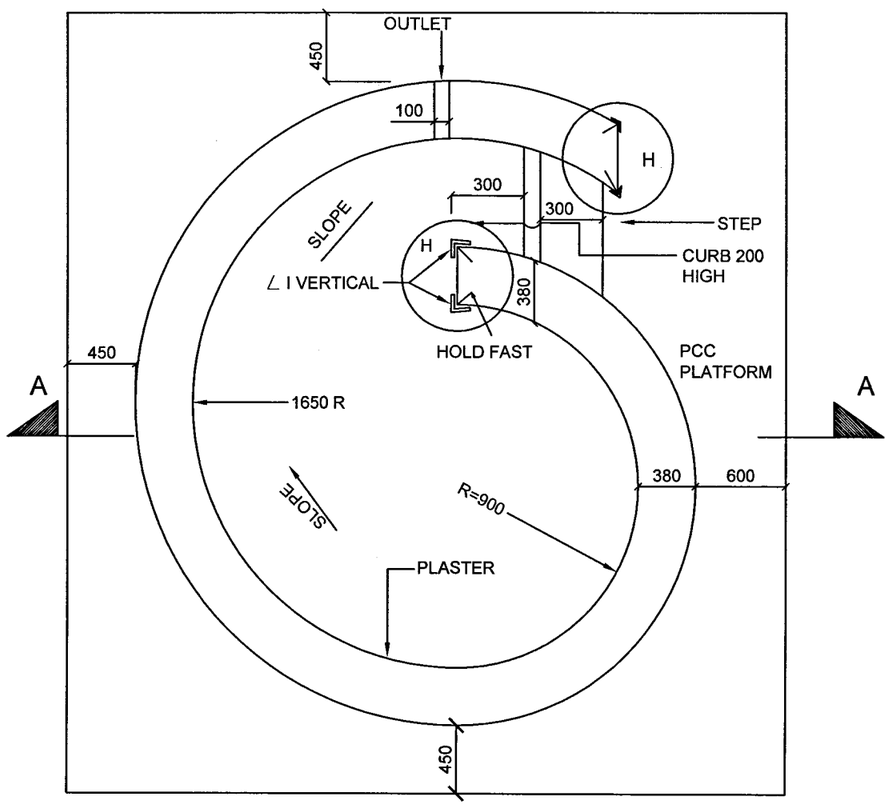

PLAN

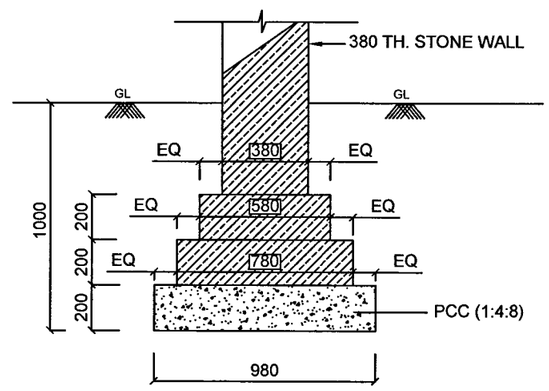

FDN FOR 380 TH WALL

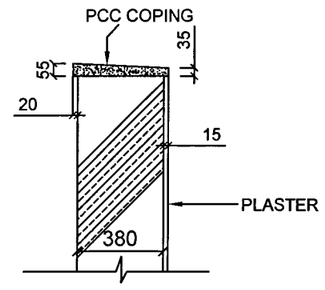

DETAIL OF PCC COPING

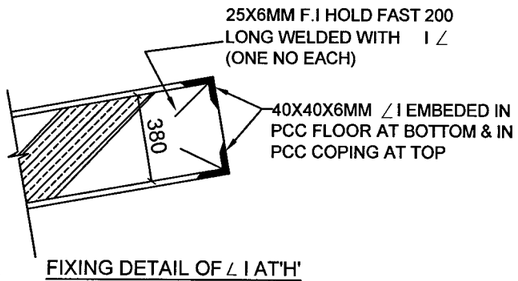

FIXING DETAIL OF ∠ I AT'H'

NOTES

1. CONTRACTOR TO CHECK & VERIFY ALL DIMENSIONS BEFORE TAKING EXECUTION OF THE WORK.
2. FIGURED DIMENSIONS SHALL BE FOLLOWED.
3. ALL DIMENSION GIVEN ARE IN MILIMETERES UNLESS OTHERWISE STATED.
4. 40mmTH.PCC1:2:4 USING 20 MM GRADED CRUSHED STOINE AGGREGATE USING GLASS DIVIDING STRIPS 38 MM WIDE 4 MM TH LAID OVER 75 MM TH PCC 1:5:10 USING 40 MM GRADED STONE AGGREGATE OVER RAMMED EARTH FILLING.
5. INTERNALLY PLASTERED & EXTERNALLY KEYED POINTING SHALL BE PROVIDED.
6. PLASTERED SURFACES SHALL BE PAINTED WITH WHITE WASH.

GARBAGE BIN

PLAN AND ELEVATION,SECTION AND DETAILS.

DATE	12-01-15	CHIEF ENGINEER UDHAMPUR ZONE	SHT. NO. 1/1
DRN	GEETA		
TCD			
CKD			
SCALE		DRG. NO. CEUZ/TD/1531/15	

AAD (ARCH)

DY ARCH

LT COL
SR ARCHITECT
FOR CHIEF ENGINEER

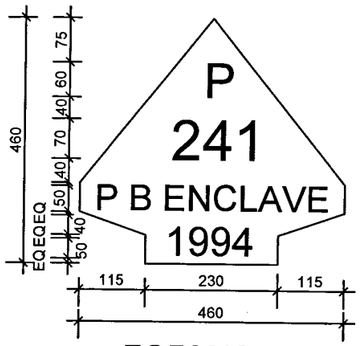

FORMAT
"10 ELEVATED"

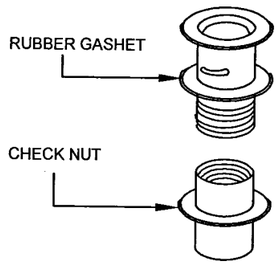

DETAIL OF CP WASTE

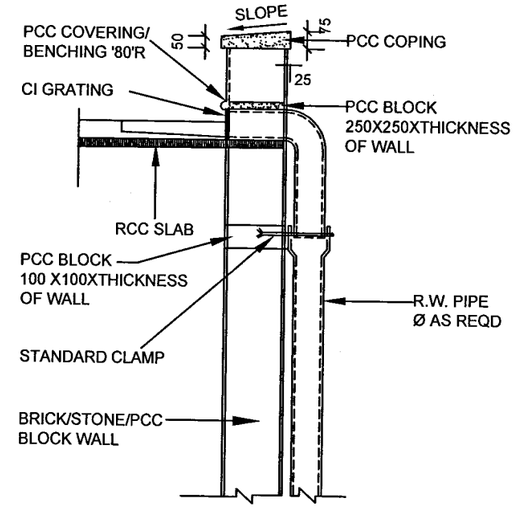

SEC AT Y-Y

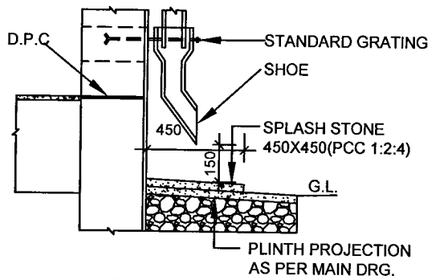

DETAIL OF SPLASH STONE

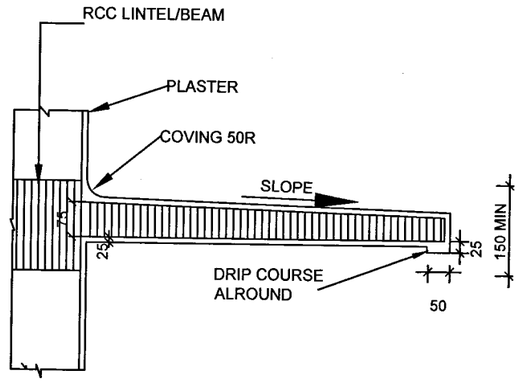

DETAIL OF RCC CHAJJA

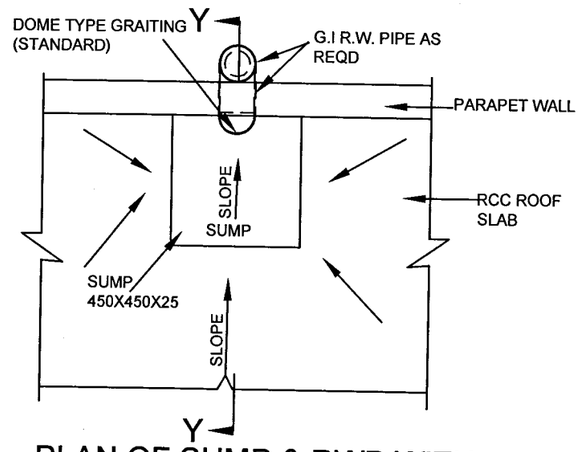

PLAN OF SUMP & RWP WITH PARAPET WALL ON ROOF SLAB

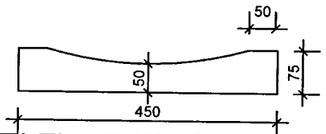

ELEVATION OF SPLASH STONE

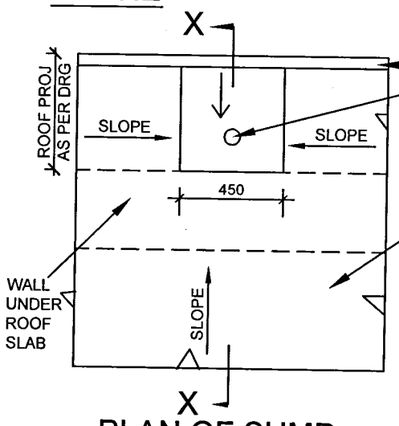

PLAN OF SUMP

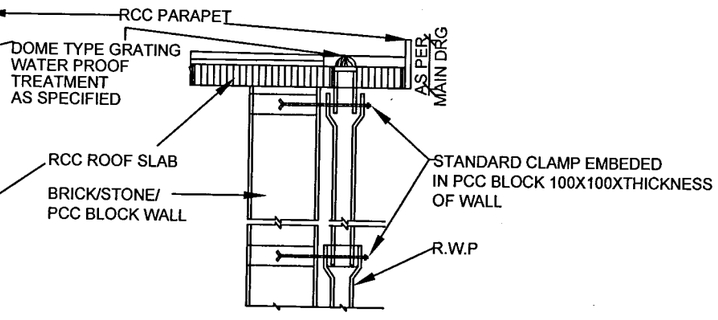

SECTION AT X-X

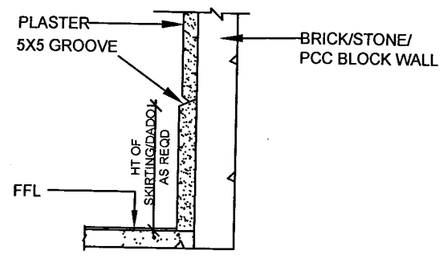

SKIRTING/DADO

NOTES :

1. CONTRACTOR TO CHECK & VERIFY ALL DIMENSIONS BEFORE EXECUTION OF THE WORK.
2. FIGURED DIMENSIONS SHALL BE FOLLOWED.
3. ALL DIMENSIONS ARE GIVEN IN MILLIMETERS.
4. A FORMAT - "P-241","P.B ENCLAVE","1994" INDICATED AS AN EXAMPLE ONLY
4. B FIGURES /LETTERS WILL BE PAINTED IN BLACK ON WHITE BACKGROUNG
4. C FORMAT WILL BE PROVIDED ABOVE LINTEL / LINTEL BAND LEVEL OF GROUND FLOOR

SNo.	DATE	DESCRIPTION	INITIAL

REVISIONS

TYPICAL DETAILS OF SKIRTING/DADO FORMAT,SUMP AND SPLASH STONE RCC CHAJJA& BELOW CP WASTE

DATE	12-01-15	CHIEF ENGINEER UDHAMPUR ZONE	SHT. NO. 1/1
DRN	GEETA		
TCD			
CKD			
SCALE		DRG. NO. CEUZ/TD/1534/15	
AAD (ARCH)		LT. COL. SENIOR ARCHITECT FOR CHIEF ENGINEER	
DY ARCH			

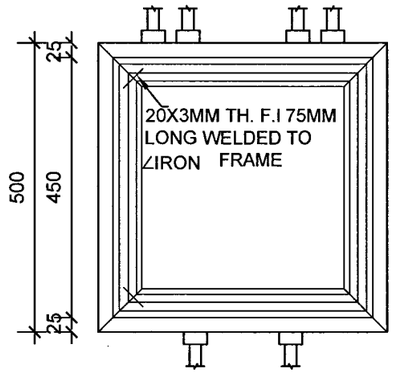

ELEVATION
(BOTH SHUTTER REMOVED)

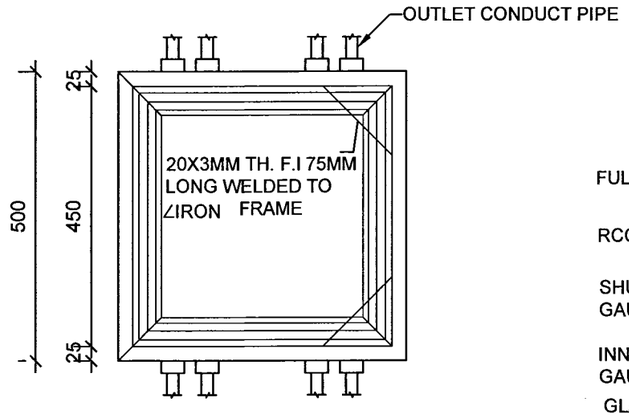

ELEVATION
(BOTH SHUTTERS REMOVED)

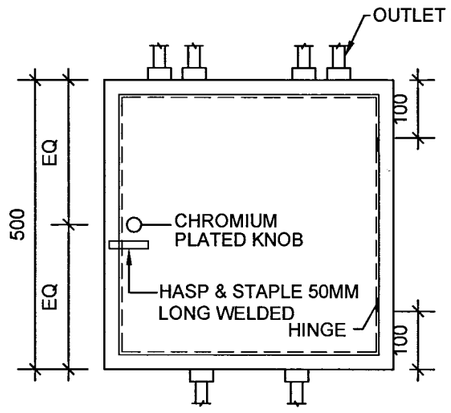

ELEVATION

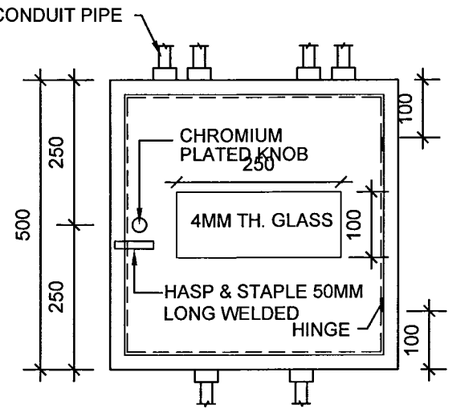

ELEVATION

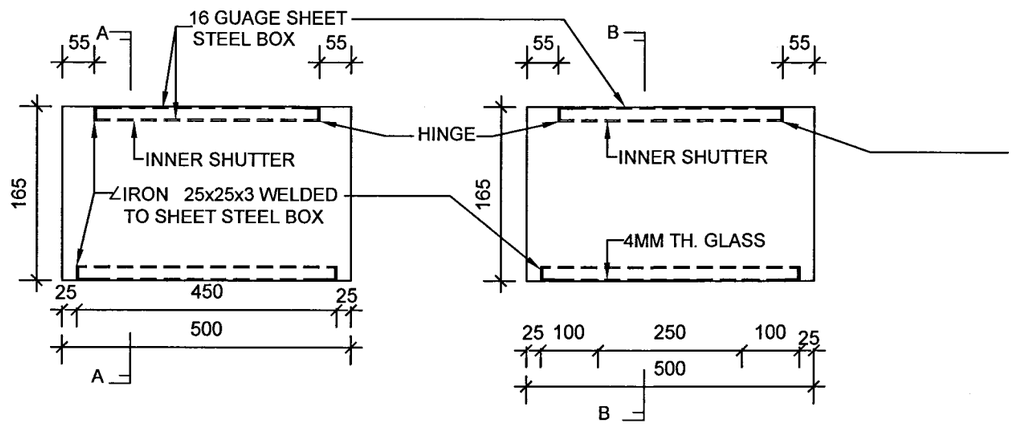

PLAN OF SWITCH BOX (S.B)

PLAN OF METER BOX (M.B)

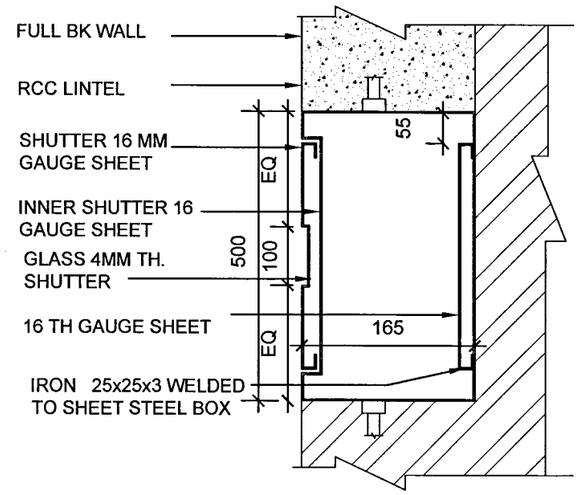

SECTION AT B-B

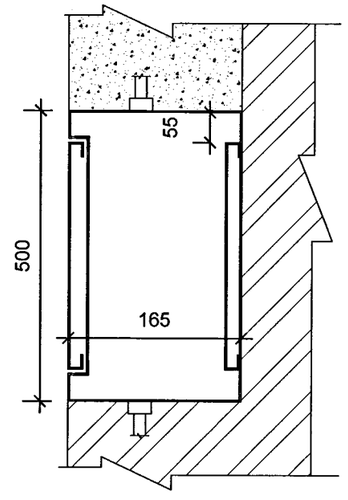

SECTION AT A-A

NOTES :

1. CONTRACTOR TO CHECK & VERIFY ALL DIMENSIONS BEFORE EXECUTION OF THE WORK.
2. FIGURED DIMENSIONS SHALL BE FOLLOWED.
3. ALL DIMENSIONS ARE GIVEN IN MILLIMETERS. UNLESS OTHERWISE SPECIFIED.
4. ALL JOINTS TO BE WELDED
5. METERBOX & SWITCH BOX SHALL BE FIXED IN WALL,NITCHES & BOTTOM OF METERBOX & SWITCH BOX TO BE 1390 & 1540 RESPECTIVELY FROM FLOOR LEVEL.
6. IN CASE METERBOX FIXED ONE ABOVEOTHER IN WALL NICHE, BOTTOM OFLOWER METER BOX SHALL BE 120 CM HIGH FROM FLOOR LVL.

SNo.	DATE	DESCRIPTION	INITIAL

REVISIONS

SWITCH BOX & METER BOX

DETAILS

DATE	12-01-15	CHIEF ENGINEER UDHAMPUR ZONE	SHT. NO. 1/2
DRN	GEETA		
TCD			
CKD			
SCALE		DRG. NO. CEUZ/TD/1538/15	

AAD (ARCH)

DY ARCH

LT. COL.
SENIOR ARCHITECT
FOR CHIEF ENGINEER

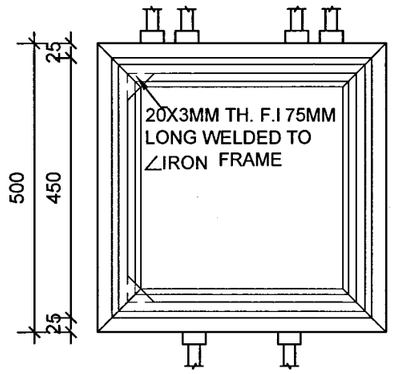

ELEVATION

(BOTH SHUTTER REMOVED)

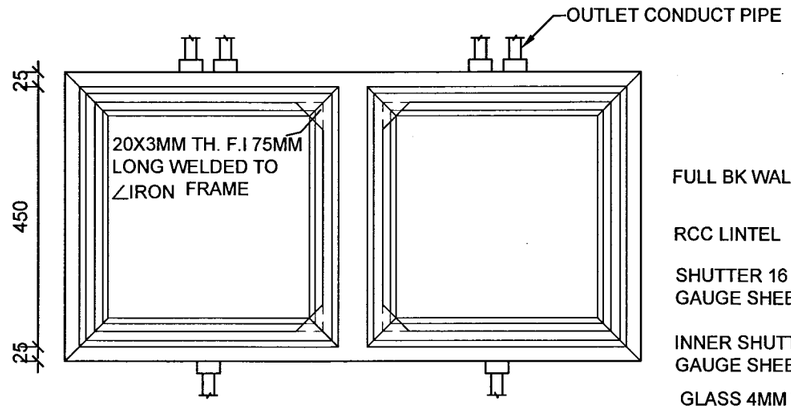

ELEVATION

(BOTH SHUTTERS REMOVED)

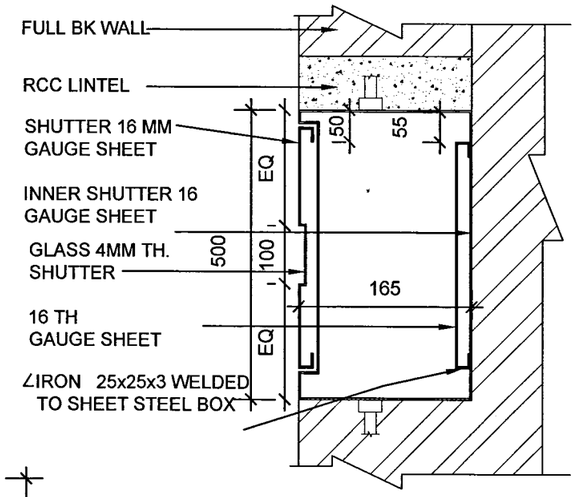

SECTION AT B-B

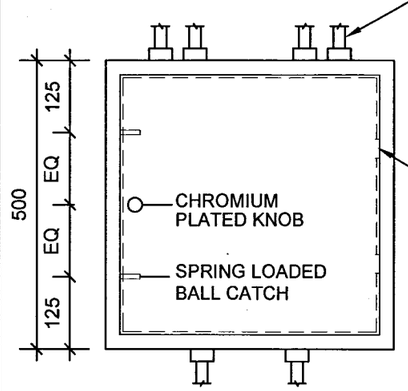

ELEVATION

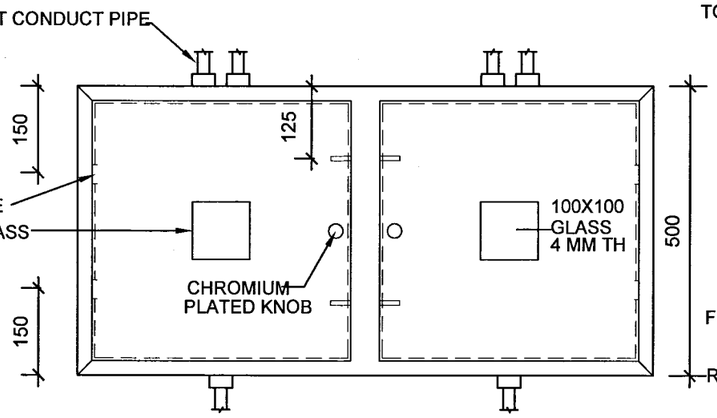

ELEVATION

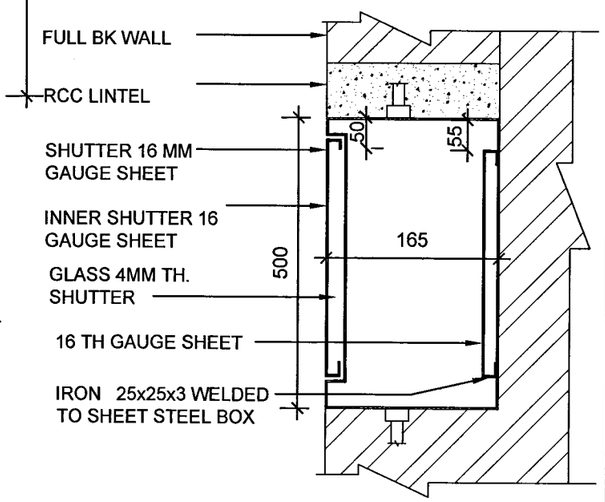

SECTION AT A-A

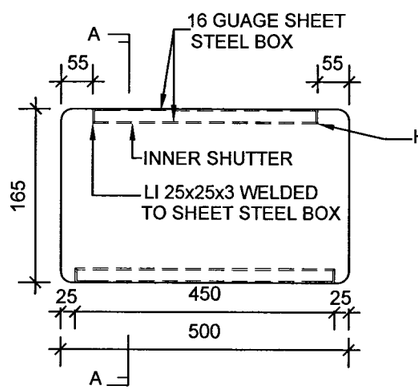

PLAN OF SWITCH BOX (S.B)

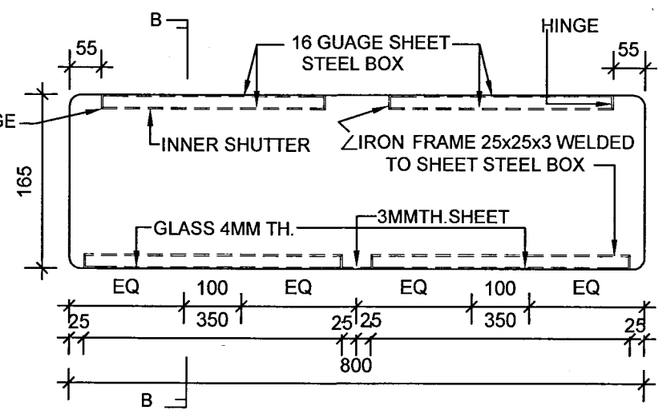

PLAN OF METER BOX (M.B)

NOTES :

1. CONTRACTOR TO CHECK & VERIFY ALL DIMENSIONS BEFORE EXECUTION OF THE WORK.
2. FIGURED DIMENSIONS SHALL BE FOLLOWED.
3. ALL DIMENSIONS ARE GIVEN IN MILLIMETERS.
4. ALL JOINTS TO BE WELDED
5. METERBOX & SWITCH BOX SHALL BE FIXED IN WALL,NICHES & BOTTOM OF METER BOX & SWITCH BOX TO BE 1390 & 1540 RESPECTIVELY FROM FLOOR LEVEL.
6. IN CASE METERBOX FIXED ONE ABOVE OTHER IN WALL NICHE, BOTTOM OF LOWER METER BOX SHALL BE 120 CM HIGH FROM FLOOR LVL.

SNo.	DATE	DESCRIPTION	INITIAL

REVISIONS

SWITCH BOX & METER BOX

DETAILS

DATE	12-01-15	CHIEF ENGINEER UDHAMPUR ZONE	SHT. NO. 2/2
DRN			
TCD			
CKD			
SCALE		DRG. NO. CEUZ/TD/1538/15	
AAD (ARCH)		LT. COL. SENIOR ARCHITECT FOR CHIEF ENGINEER	
DY ARCH			

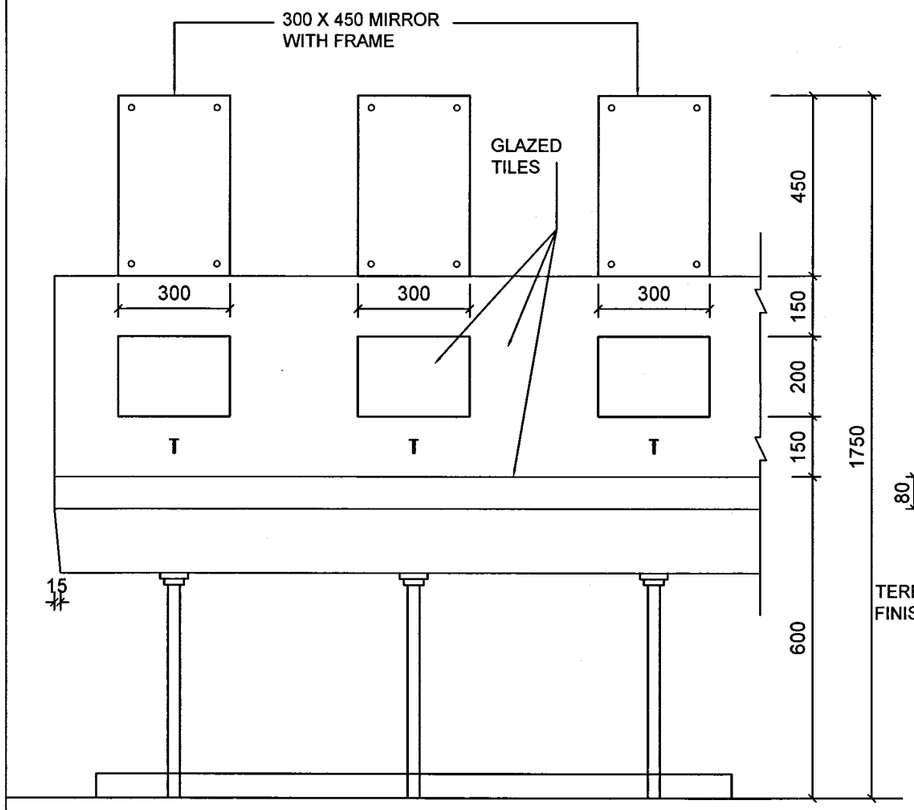

ELEVATION

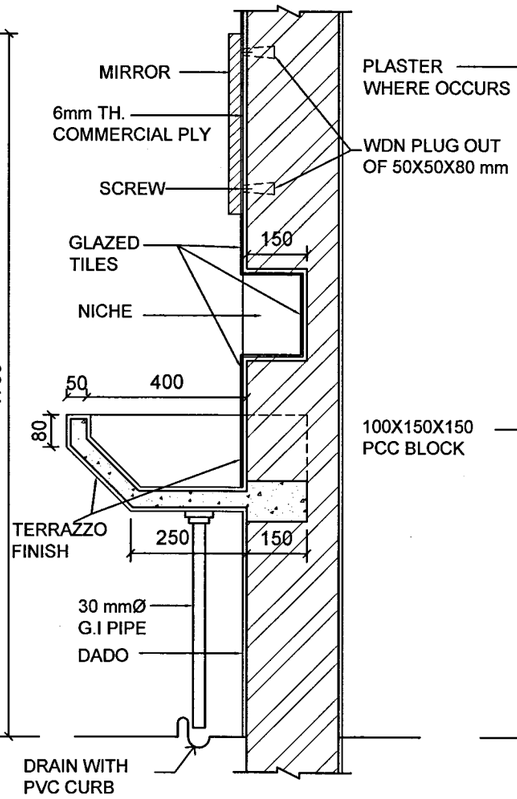

SECTION AT X-X

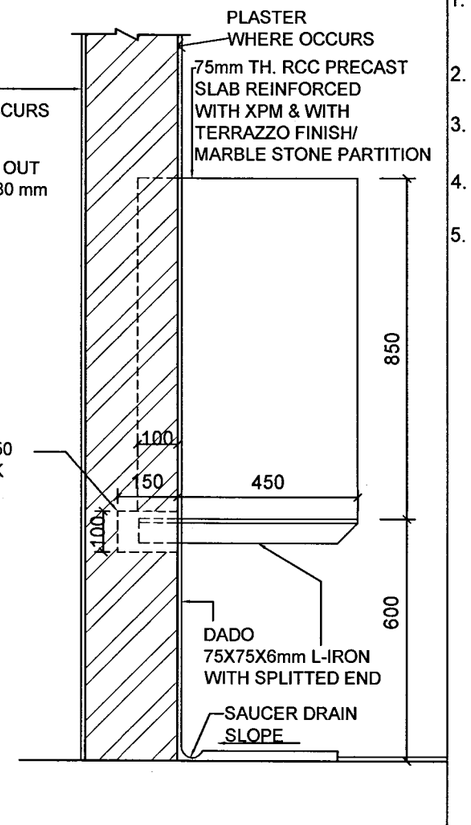

DETAIL OF
URINAL PARTITION

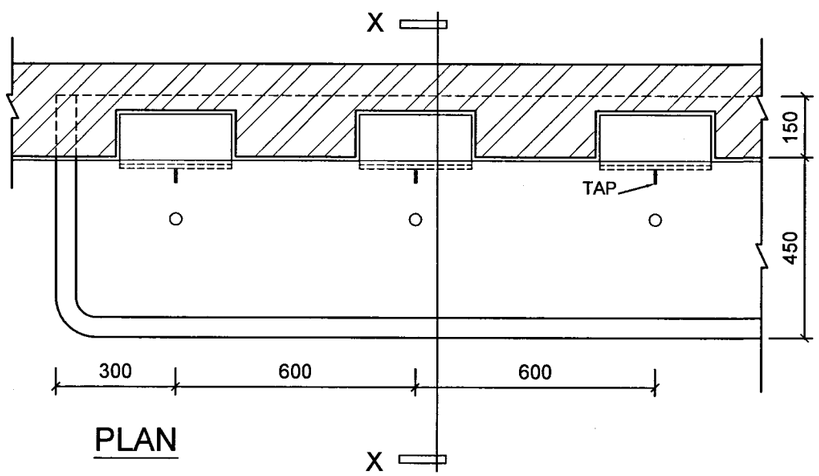

PLAN

SCALE: 1:20

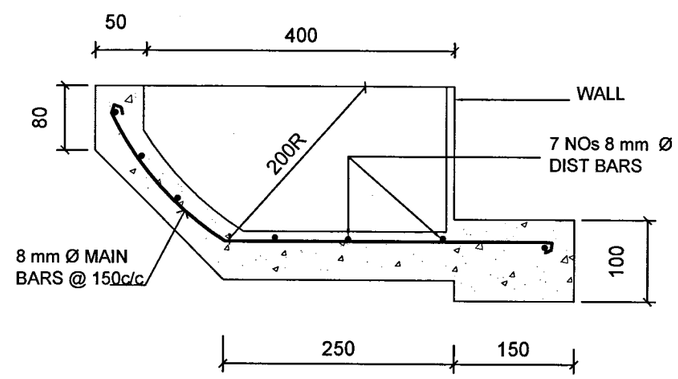

RCC DETAIL OF TROUGH TYPE W.H.B

SCALE: 1:10

NOTES :

1. CONTRACTOR TO CHECK & VERIFY ALL DIMENSIONS BEFORE EXECUTION OF THE WORK.
2. FIGURED DIMENSIONS SHALL BE FOLLOWED.
3. ALL DIMENSIONS ARE GIVEN IN MM. UNLESS OTHERWISE SPECIFIED.
4. SIZES GIVEN FOR MIRROR ARE FINISHED SIZES.
5. TROUGH TYPE WHB COMPLETE FIXTURE SHOWN IN THIS DRG. IS TYPICAL. NUMBER OF TAPS & FIXTURE SHALL DEPEND UPON THE TAPS SHOWN IN MAIN PLAN.

SR. NO.	DATE	DESCRIPTION	INITIAL
		REVISION	

TROUGH TYPE WHB WITH MIRROR & URINAL PARTITION

PLAN, ELEVATION & SECTION

DATE	12-01-15	CHIEF ENGINEER UDHAMPUR ZONE	SHT. NO. 1/1
DRN	GEETA		
TCD			
CKD			
SCALE		DRG. NO. CEUZ/TD/1539/15	

AAD (ARCH)

DY ARCH

LT. COL
SENIOR ARCHITECT
FOR CHIEF ENGINEER

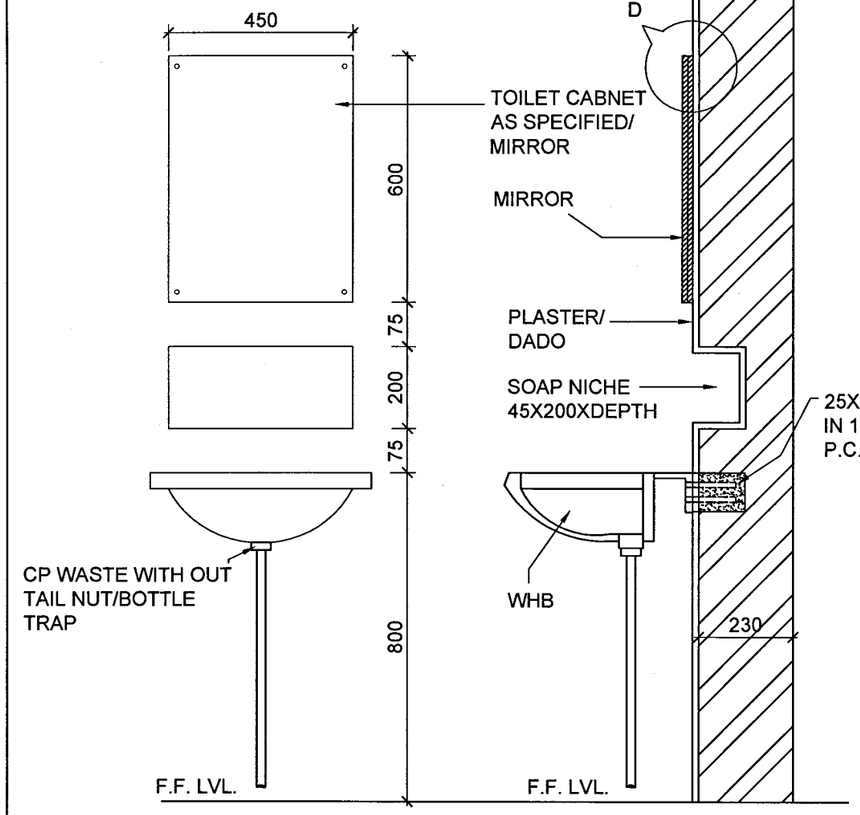

ELEVATION
SCALE=1:20

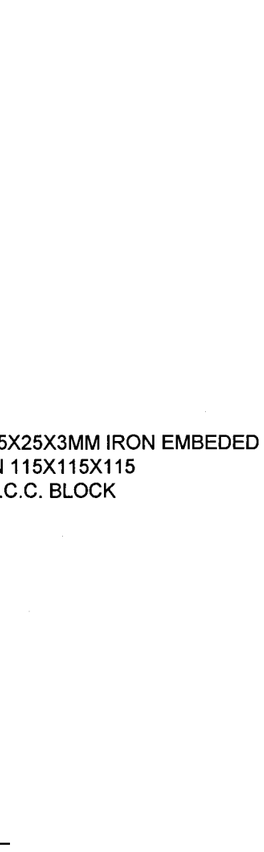

SECTION AT A-A
SCALE=1:20

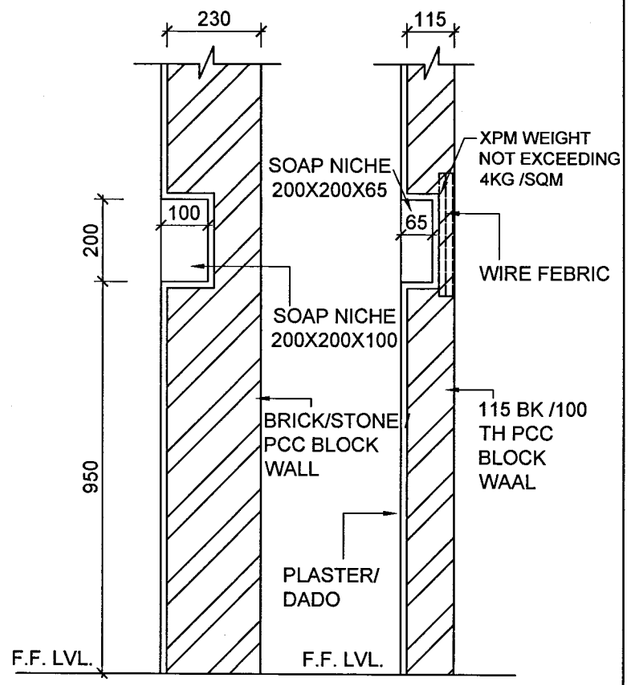

SECTION AT B-B
SCALE=1:20

SECTION AT C-C
SCALE=1:20

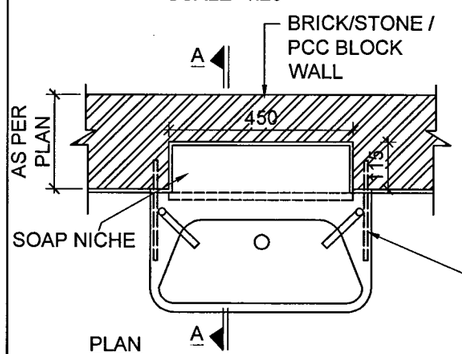

PLAN
DETAIL OF WHB/NICH & MIRROR
SCALE=1:20

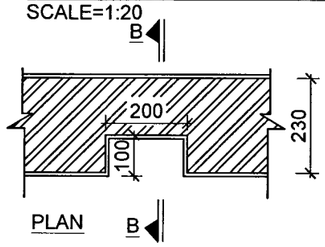

PLAN
DETAIL OF SOAP NICHE
SCALE=1:20

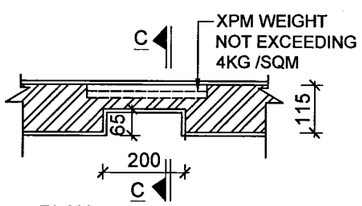

PLAN
SCALE=1:20

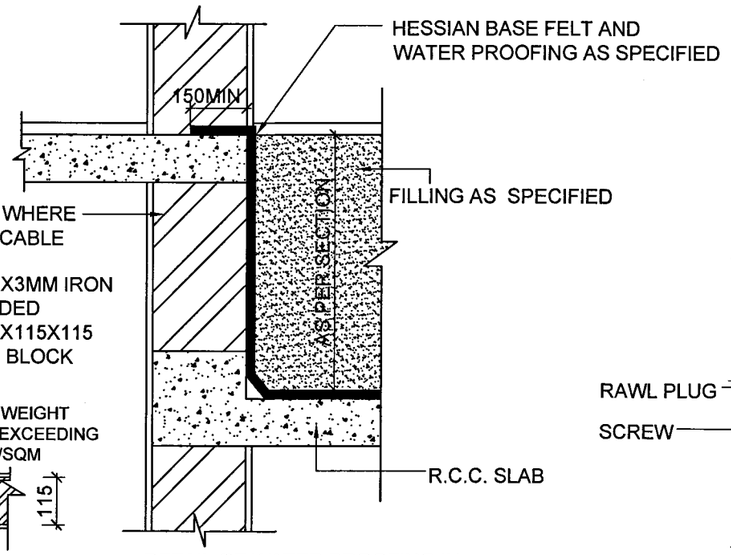

DETAIL OF WATER PROOFING IN SUNK SLAB FOR BATH / W.C / TOILET & KITCHEN ON FLOOR AND ABOVE
SCALE=1:20

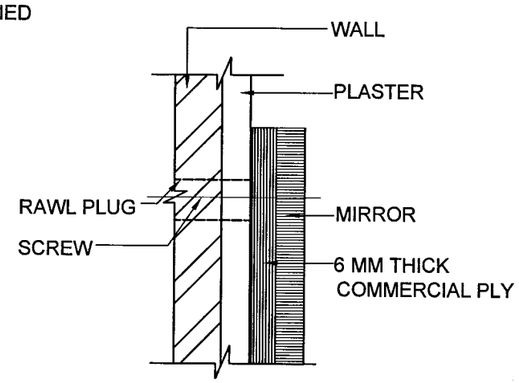

SECTION AT D
SCALE=1:20

NOTES :

1. CONTRACTOR TO CHECK & VERIFY ALL DIMENSIONS BEFORE EXECUTION OF THE WORK.
2. FIGURED DIMENSIONS SHALL BE FOLLOWED.
3. ALL DIMENSIONS ARE GIVEN IN MILLLIMETERS UNLESS OTHERWISE SHOWN.
4. SIZES GIVEN FOR MIRROR ARE FINISHED SIZES.

Sr No.	DATE	DESCRIPTION	INITIAL

REVISION

WHB/ SOAP NITCHES SUNKEN SLAB AND SKIRTING / DADO

DETAILS

DATE	12-01-15	CHIEF ENGINEER UDHAMPUR ZONE	SHT. NO. 1/1
DRN	GEETA		
TCD			
CKD			
SCALE		DRG. NO. CEUZ/TD/1540/15	

AAD (ARCH)

DY ARCH

LT. COL.
SENIOR ARCHITECT
FOR CHIEF ENGINEER

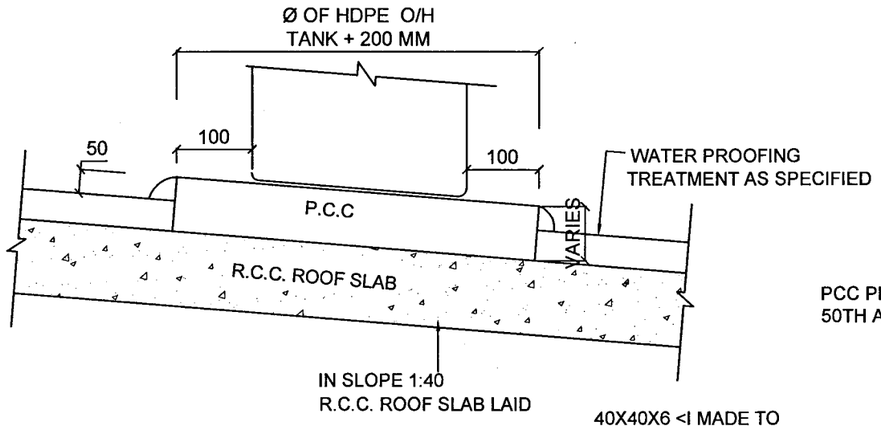

DETAIL OF P.C.C. PLATFORM FOR HDPE WATER TANK (FOR SLOPE ROOF SLAB)

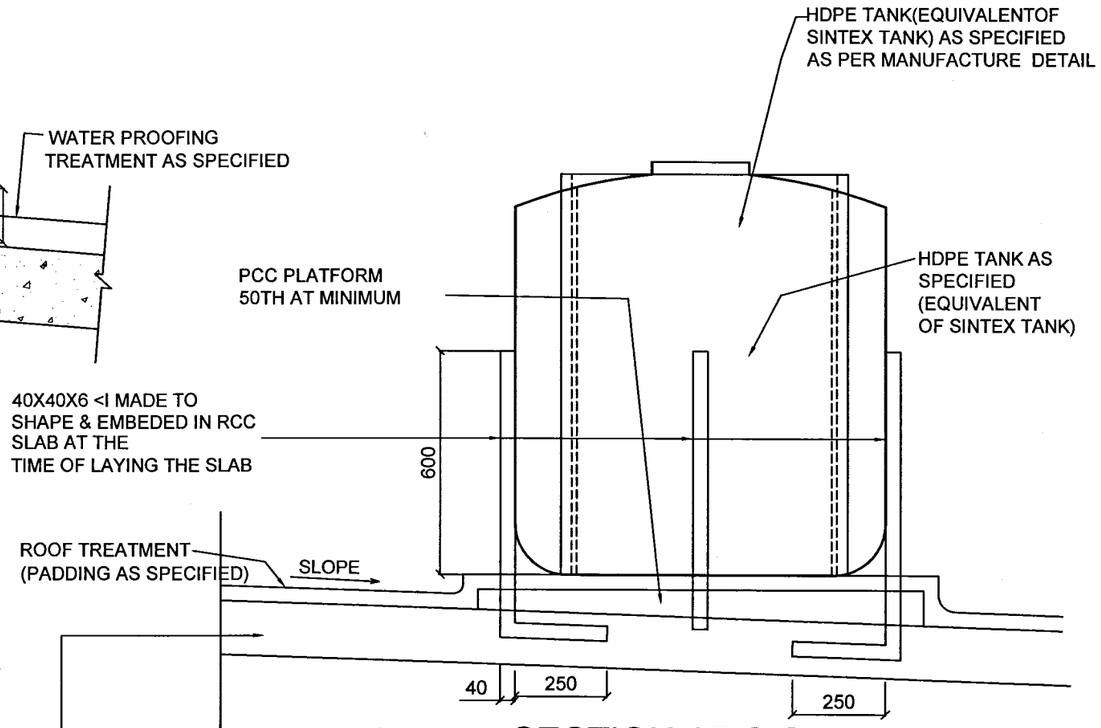

SECTION AT S-S

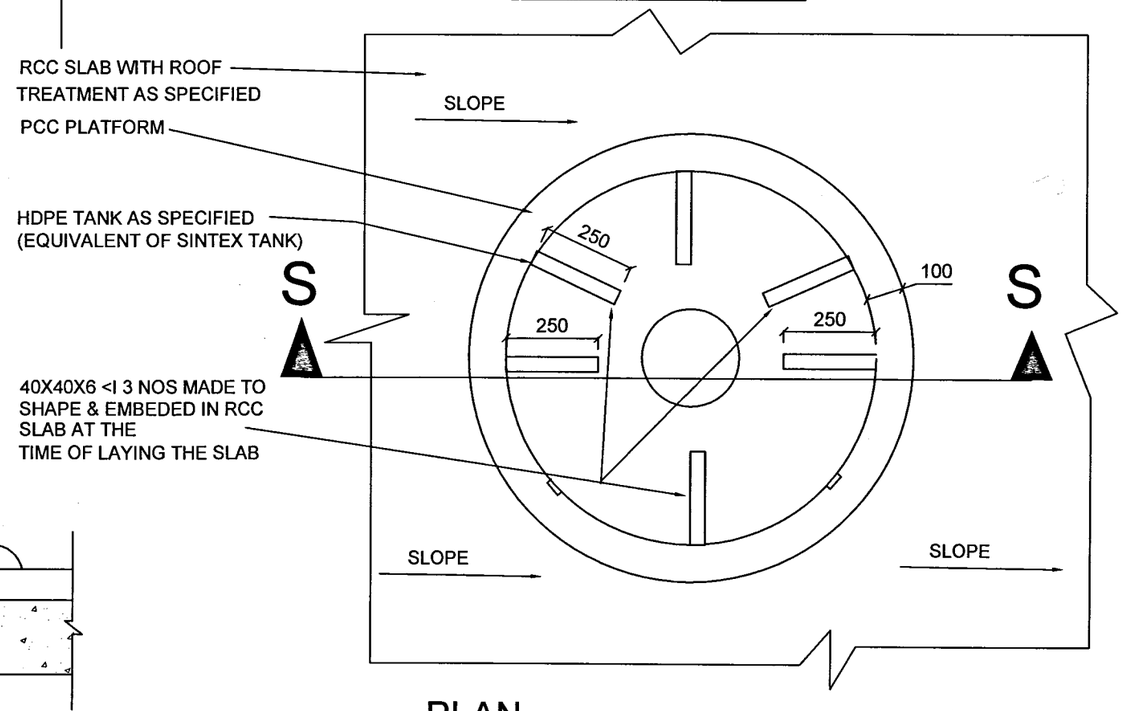

PLAN

FIXING DETAIL OF HDPE WATER TANK

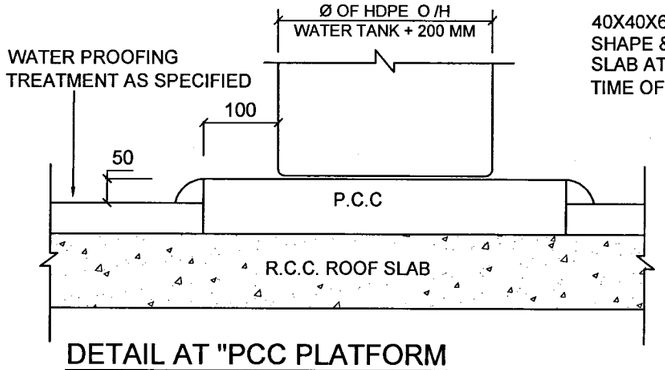

DETAIL AT "PCC PLATFORM (FOR FLAT ROOF SLAB)

NOTES :

1. CONTRACTOR TO CHECK & VERIFY ALL DIMENSIONS BEFORE EXECUTION OF THE WORK.
2. FIGURED DIMENSIONS SHALL BE FOLLOWED.
3. ALL DIMENSIONS ARE GIVEN IN MILLLIMETERS UNLESS OTHERWISE SHOWN.

Sr. NO	DATE	DESCRIPTION	INITIAL
REVISION			

DETAIL OF P.C.C PLATFORM & FIXING ARRANGEMENTS FOR HDPE WATER TANK

DATE	12-01-15	CHIEF ENGINEER UDHAMPUR ZONE	SHT. NO. 1/1
DRN	GEETA		
TCD			
CKD			
SCALE		DRG. NO. CEUZ/TD/1543/15	
AAD (ARCH)		LT. COL SENIOR ARCHITECT FOR CHIEF ENGINEER	
DY ARCH			

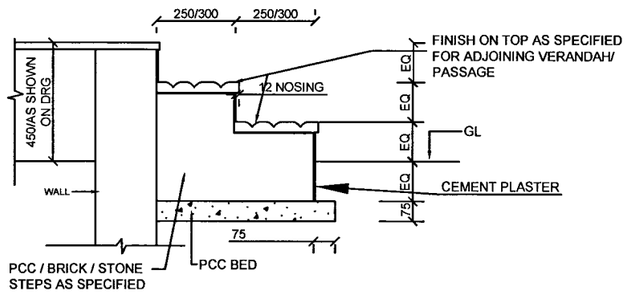

DETAILS OF STEP

NOTE :- IN CASE OF PLINTH HT. MORE THAN 500 OR LESS THAN 450 THE RISER SHALL BE PROVIDED 150 INCREASED OR DECREASED ACCORDINGLY.

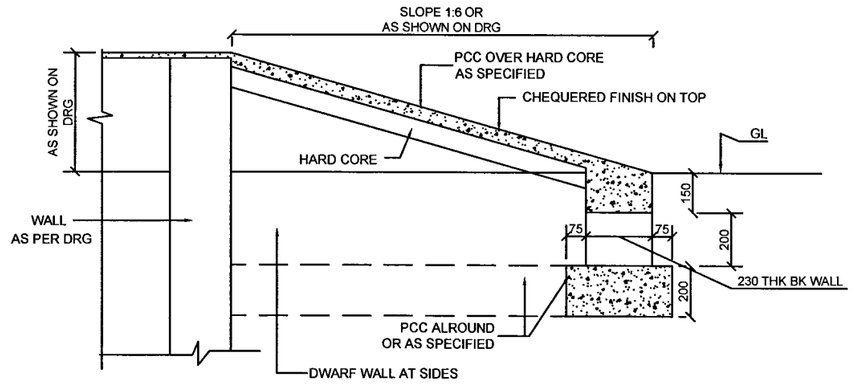

DETAILS OF RAMP

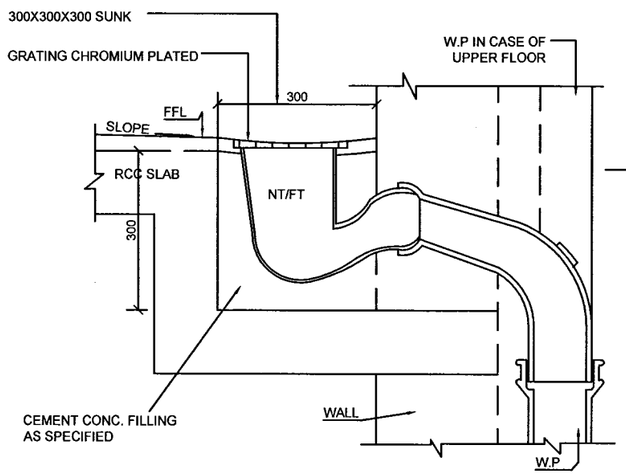

SECTION THRO DETAIL OF LOCAL SUNK

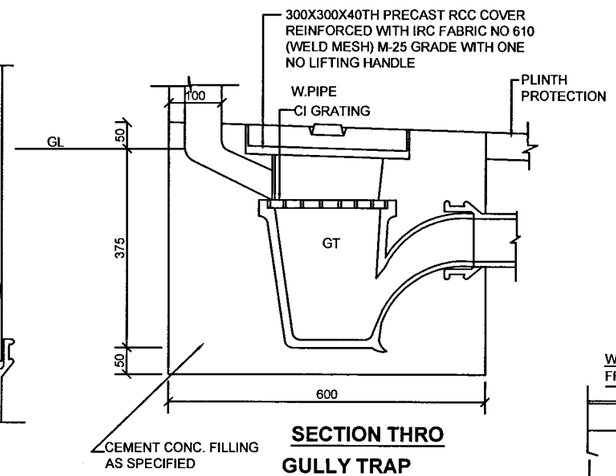

SECTION THRO GULLY TRAP

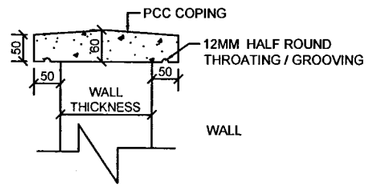

SECTION PCC COPING

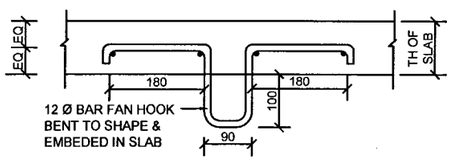

DETAIL OF FAN HOOK

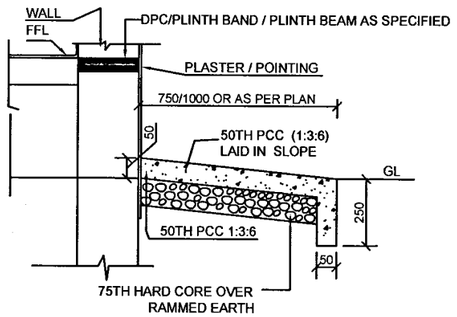

SECTION PLINTH PROTECTION

NOTES

1. CONTRACTOR TO CHECK AND VERIFY ALL THE DIMENSIONS BEFORE EXECUTION OF THE WORK.
2. FIGURED DIMENSIONS SHALL BE FOLLOWED.
3. ALL DIMENSIONS ARE GIVEN IN MILLIMETERS.
4. WALL THICKNESS SHALL BE AS INDICATED ON MAIN DRAWINGS OR AS SPECIFIED.
5. REFER TYPICAL DETAILS SHOWN IN THIS DRG AS APPLICABLE WHEN NOT SHOWN IN THE MAIN DRGS
6. THE DETAILS/SPECIFICATION SHOWN IN THE MAIN DRGS SHALL SUPERCEED THE DETAILS/SPECIFICATION SHOWN IN THIS DRG.

S NO	DATE	DESCRIPTION	INITIALS

REVISIONS

MISC TYPICAL DETAILS-2

DATE	12-01-15	CHIEF ENGINEER UDHAMPUR ZONE	SHT. NO. 1/3
DRN	GEETA		
TCD			
CKD			
SCALE		DRG. NO. CEUZ/TD/1544/15	

AAD (ARCH)

DY ARCH

LT. COL.
SENIOR ARCHITECT
FOR CHIEF ENGINEER

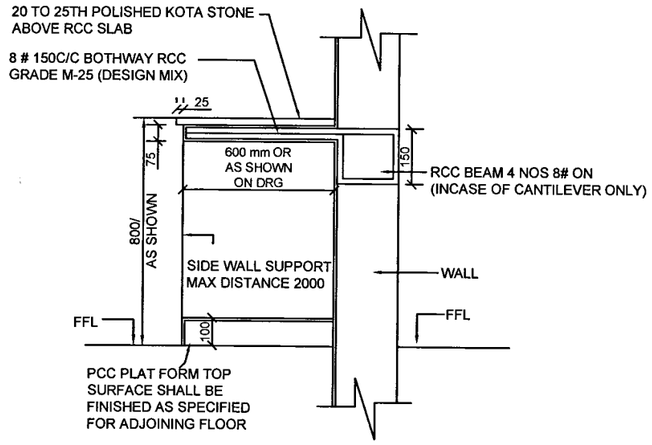

SECTION

KOTA STONE ABOVE RCC SLAB COOKING PLATFORM / PREPARATION PLATFORM

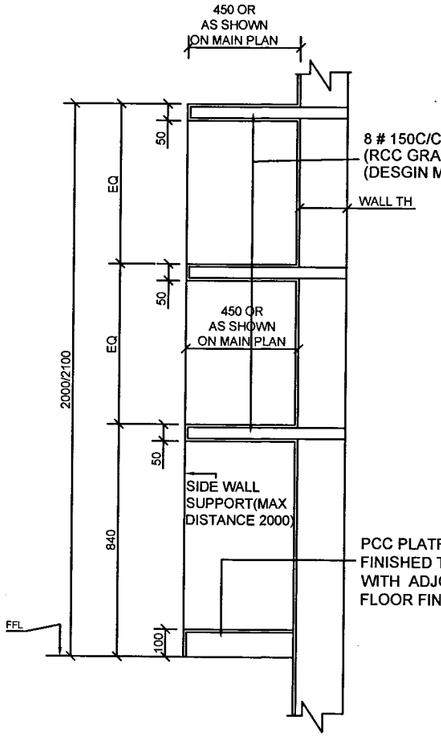

SECTION

RCC SHELVES 3 TIER

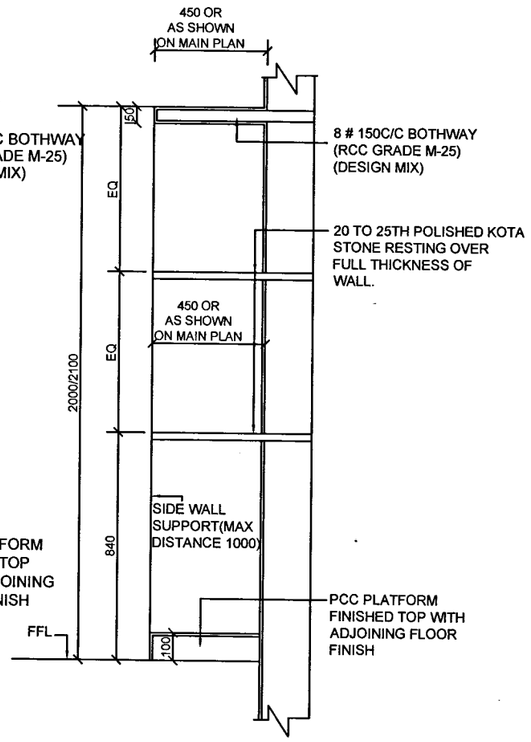

SECTION

KOTA STONE SHELVES 2 TIER

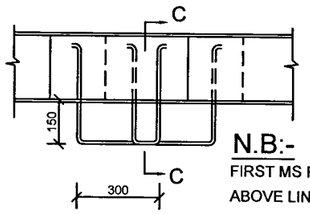

N.B:-
FIRST MS RUNG TO BE FIXED 150 ABOVE LINTEL LEVEL AT GF.

PLAN

TYPICAL DETAILS OF MS RUNG

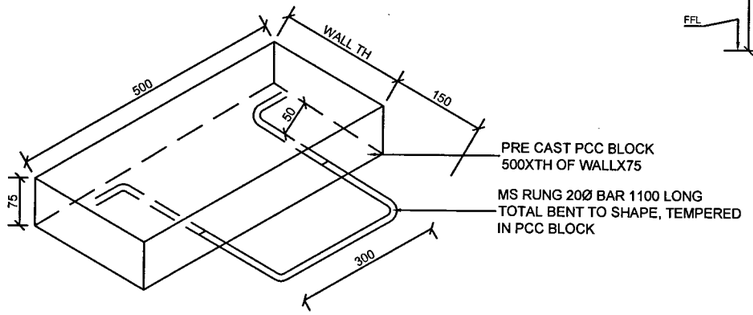

VIEW OF PRECAST PCC BLOCK (ONE UNIT)

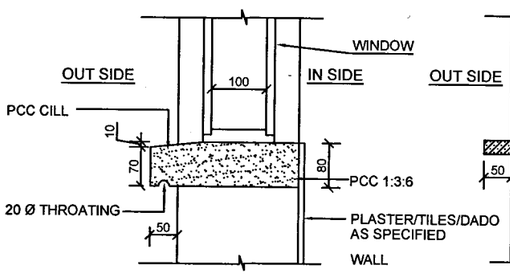

SECTION

PCC CILL

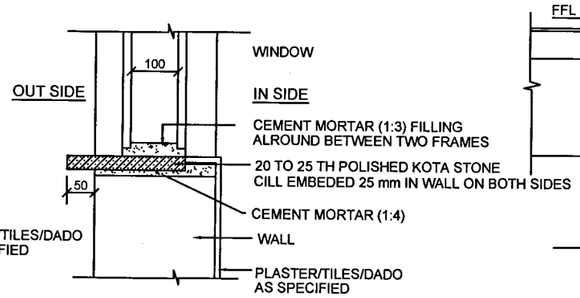

DETAIL OF POLISHED KOTA STONE CILL TYPE-1

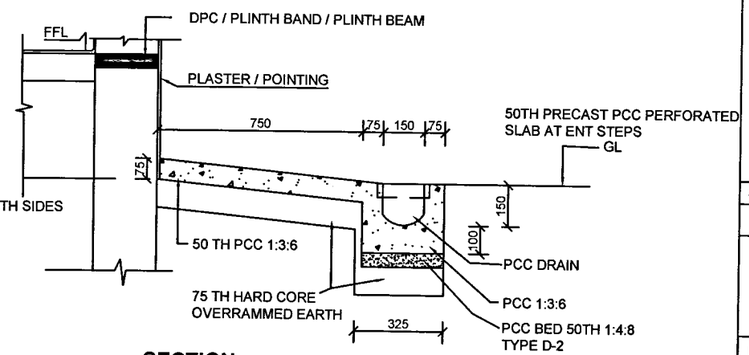

SECTION

PLINTH PROTECTION WITH DRAIN

NOTES

1 FOR NOTES REFER SHT.NO. 1/3 OF THIS DRG.

S NO	DATE	DESCRIPTION	INITIALS

REVISIONS

MISC TYPICAL DETAILS-2

DATE	12-01-15	CHIEF ENGINEER UDHAMPUR ZONE	SHT. NO. 2/3
DRN	GEETA		
TCD			
CKD			
SCALE		DRG. NO. CEUZ/TD/1544/15	

AAD (ARCH)

DY ARCH

LT. COL
SENIOR ARCHITECT
FOR CHIEF ENGINEER

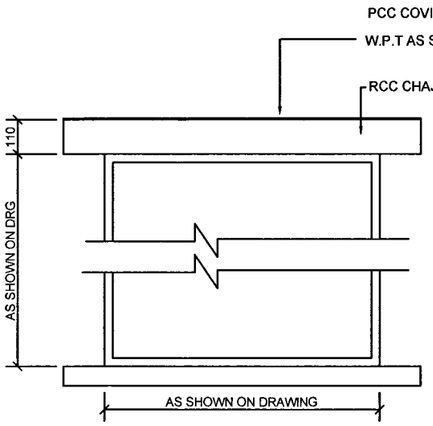

ELEVATION

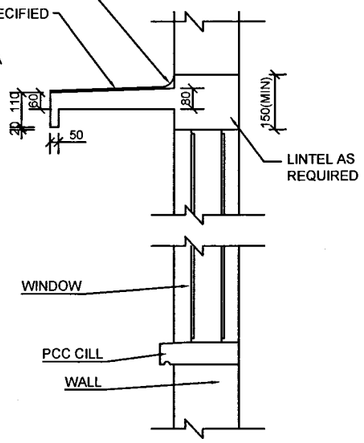

SECTION A-A

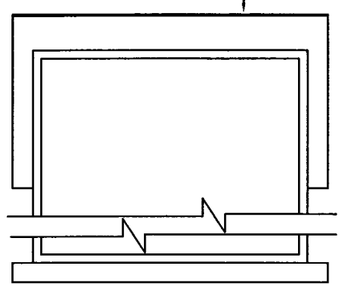

ELEVATION

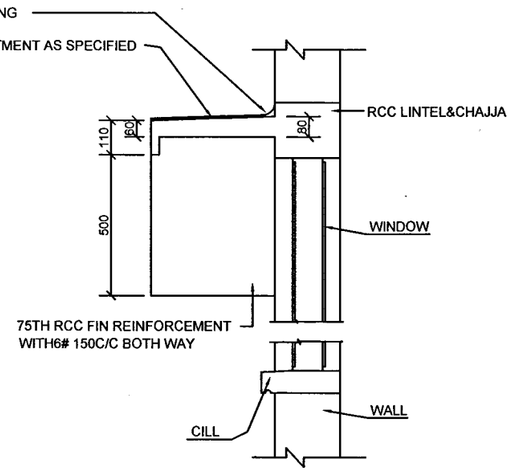

SECTION B-B

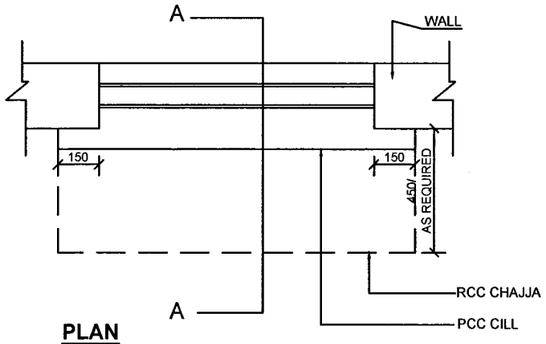

PLAN

RCC CHAJJA TYPE-A

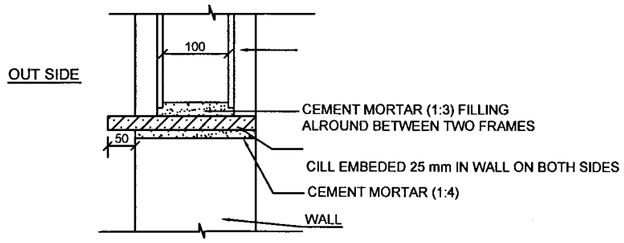

DETAIL OF POLISHED

KOTA STONE CILL TYPE-2

N.B-

DETAILS OF RCC CHAJJA TYPE A & B ARE ALSO APPLICABLE
FOR OUT SIDE DOORS/OPENINGS AS INDICATED IN MAIN DRAWINGS.

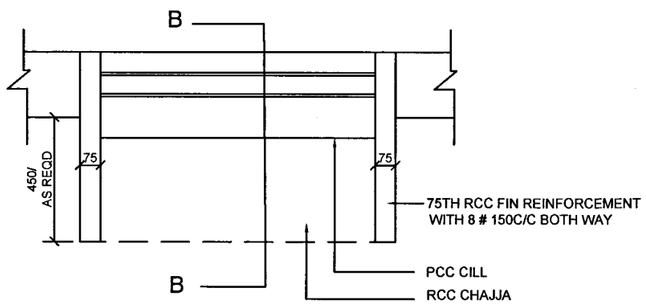

PLAN

RCC CHAJJA TYPE-B

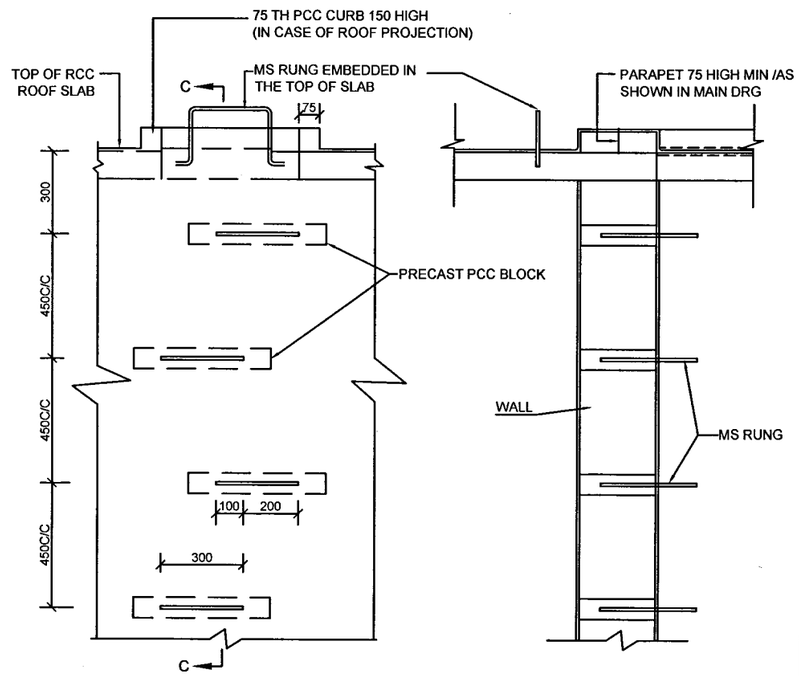

ELEVATION

SECTION `C-C'

NOTES

1 FOR NOTES REFER SHT.NO. 1/3 OF THIS DRG.

S NO	DATE	DESCRIPTION	INITIALS

REVISIONS

MISC TYPICAL DETAILS-2

DATE	12-01-15	CHIEF ENGINEER UDHAMPUR ZONE	SHT. NO. 3/3
DRN	GEETA		
TCD			
CKD			
SCALE		DRG. NO. CEUZ/TD/1544/15	
AAD (ARCH)		LT. COL SENIOR ARCHITECT FOR CHIEF ENGINEER	
DY ARCH			

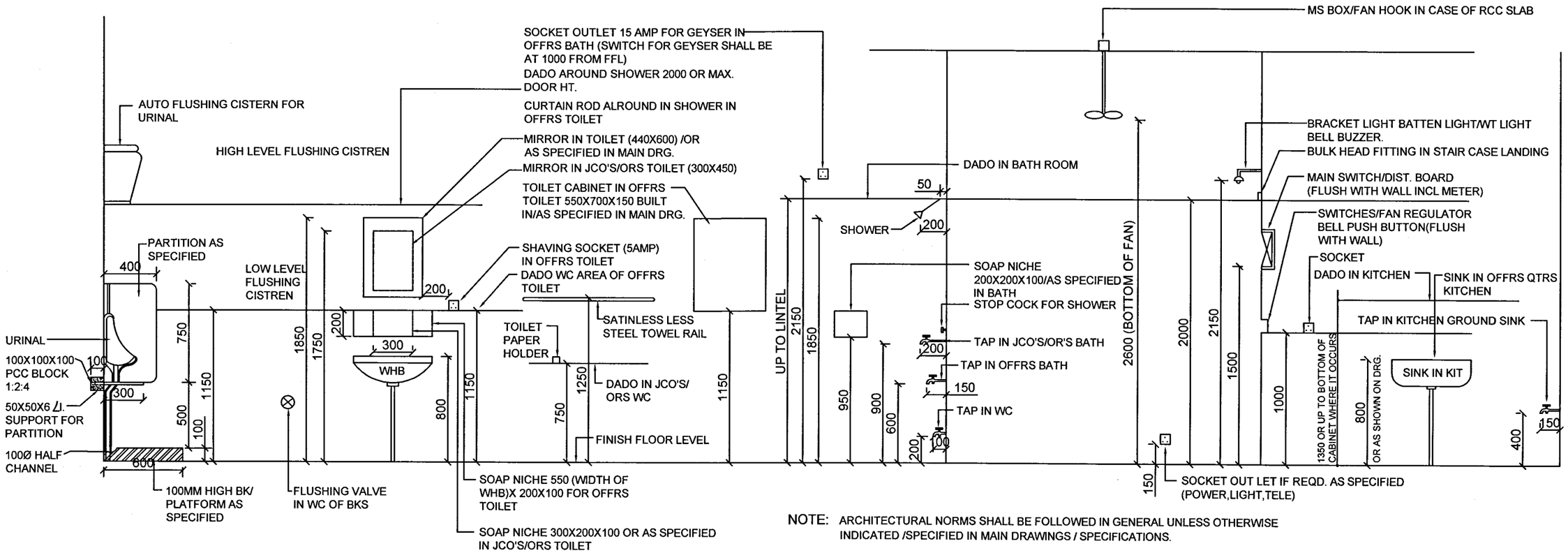

NOTE: ARCHITECTURAL NORMS SHALL BE FOLLOWED IN GENERAL UNLESS OTHERWISE INDICATED /SPECIFIED IN MAIN DRAWINGS / SPECIFICATIONS.

ARCHITECTURAL NORMS

NOTES FOR SCHEDULE OF FINISHES:-

1. ALL EXTERNAL PIPES (SOIL, WASTE,VENT & RAIN WATER ETC.)SHALL BE PAINTED WITH SYNTHETIC ENAMEL PAINT 1ST QUALITY IN COLOUR SHADE TO MATCH WITH THE ADJACENT SURFACE
2. WOOD WORK IN DIRECT CONTACT WITH MASONARY OR CONCRETE SHALL BE TREATED WITH TWO COATS OF HOT TAR.
3. ALL HIDDEN SURFACES OF WOOD WORK SHALL BE TREATED WITH TWO COATS OF CREOSOTE OIL.
4. OVER HEAD WATER TANK SHALL BE PROVIDED WITH LOCKING ARRANGEMENT & SHALL BE TREATED WITH TWO COAT OF CEMENT PAINT INCLUDING. ITS SUPPORTING ELEMENTS.
5. EXPOSED SURFACES OF RCC WORK SHALL BE PLASTERED 5mm TH. IN CEMENT MORTAR (1:3) FINISHED EVEN & SMOOTH AS SPECIFIED RCC SURFACES FLUSHED WITH WALL SHALL BE PLASTERED SAME AS SPECIFIED FOR WALL.
6. UNEXPOSED STEEL WORK EXCEPT REINFORCEMENT SHALL BE PAINTED WITH TWO COATS OF RED OXIDE PAINT BEFORE PLACING THEM IN POSITION.
7. EXTERNAL PLASTER/POINTING SHALL BE UP TO 150 mm BELOW GROUND LEVEL WHERE PLINTH PROTECTION IS NOT TO BE PROVIDED.
8. PLASTERED GROOVE 15 mm WIDE & 6 mm DEEP SHALL BE PROVIDED -INTERNALLY AT ALL JUCTIONS OF RCC COLUMN,BEAMS & SLAB WITH WALLING.
9. INTERNAL PLASTERED SURFACES OF CUPBOARD & WARDROBES SHALL BE TREATED WITH TWO COATS OF SYNTHETIC ENAMEL PAINT (WHITE) OVER ONE COAT OF PRIMER.
10. LOCATIONS NOT COVERED IN THE DRG SHALL BE FINISHED SAME AS PER ADJACENT SURFACES/DETAIL DRAWINGS.
11. WIRE GAUGE OF FLY PROOF/MOSQUITO PROOF SHUTTERS SHALL NOT BE PAINTED.
12. CAST-IN-SITU TERRAZO SHALL BE PROVIDED WITH 4 TO 7 MM SIZE MARBLE CHIPS. AS SPECIFIED
13. INTERNAL & EXTERNAL FACES OF THE PARAPET WALL (AT ROOF) SHALL BE FINISHED WITH 15 mm TH PLASTER AS PER EXTERNAL FINISH AS SPECIFIED.

S NO	DATE	DESCRIPTION	INITIALS

REVISIONS

ARCHITECTURAL NORMS AND GENERAL NOTES

DATE	12-01-15	CHIEF ENGINEER UDHAMPUR ZONE	SHT. NO. 1/2
DRN	GEETA		
TCD			
CKD			
SCALE		DRG. NO. CEUZ/TD/1545/15	
AAD (ARCH)		LT. COL SENIOR ARCHITECT FOR CHIEF ENGINEER	
DY ARCH			

ARCHITECTURAL

1 CONTRACTOR TO CHECK AND VERIFY ALL DIMENSIONS BEFORE EXECUTION THE WORK.

2 ALL DIMENSIONS ARE GIVEN IN MILLIMETRES UNLESS OTHERWISE SPECIFIED

3 FIGURED DIMENSIONS SHALL BE FOLLOWED.

4 EXECUTIVE AUTHORITY SHALL CHECK AND VERIFY ALL THE DRGS.BEFORE TAKING EXECUTION IN HAND.

5 ALL GLAZED WINDOWS VENTILATORS SHALL BE PROVIDED WITH GUARD BARS (AS PER DETAILS) OR AS SPECIFIED IN MAIN DRG.

6 IN CASE OF WINDOWS,VENTILATORS:-MOSQUITO PROOF SHUTTER SHALL OPEN INSIDE AND GLAZED SHUTTER OPEN OUTSIDE.

7 IN CASE OF DOORS:-MOSQUITO PROOF SHUTTER SHALL OPEN OUTSIDE & PANELLED SHUTTER SHALL OPEN INSIDE THE ROOM.

8 THE MINIMUM DIMENSIONS GIVEN FOR ROOM HEIGHT SHALL BE MEASURED AT THE FARTHEST END FROM THE RIDGE LINE INSIDE THE ROOM AS SHOWN.

9 THE HEIGHT OF PARAPET WALL ON THE ROOF TOP SHALL BE PROVIDED (HT SHOWN IN THE DRG) AT THE RIDGE LINE & SHALL INCREASE ACCORDINGLY. AS SHOWN IN ELEVATION

10 FLOOR TO FLOOR HEIGHT SHOWN IS FROM FFL TO FFL FOR GROUND FLOOR & FFL TO TOP OF RCC SLAB EXCLUDING WP TREATMENT AT TOP FLOOR.

11 DETAILS GIVEN IN TD DRGS SHALL BE FOLLOWED AS INDICATED IN MAIN DRAWING.

12 RCC/STRUCTURAL ELEMENTS SHALL BE FOLLOWED WITH SIZE/THICKNESS AS PER STR. DRGS.IRRESPECTIVE OF THE SAME IS SHOWN OR NOT SHOWN IN ARCH DRGS.

13 50X25 DRIP MOULD IN PLASTER SHALL BE PROVIDED TO ALL ROOF PROJECTIONS/CANOPYS/CHAJJAS WITH OUT DOWN WARD FACIA

14 FOR FIXING OF EXHAUST FAN THE PROVISION OF 4 NOS BOLT TO BE MADE WHICH ARE EMBEDED IN WALL WITH PCC BLOCK (100X100X150 PCC 1:2:4)

15 PCC COPING SHALL BE PROVIDED ABOVE ALL PARAPET WALL/COMPOUND WALL AS PER DETAIL.

16 DETAILS OF ROLLING SHUTTERS & COLLAPSIBLE DOOR (GATE) SHALL BE AS PER MANUFACTURERS DETAILS WITH FIXING AT SITE OR AS SPECIFIED.

17 THE OPENING FOR EXHAUST FANS (OF REQUIRED DIAMETER) SHALL BE PROVIDED BELOW FLOOR/ROOF BAND/BEAM UNLESS OTHERWISE INDICATED.

18 PLINTH PROJECTION SHALL BE PROVIDED ALROUND THE BLDG AS PER DETAIL & AS SPECIFIED.

19 PIPE FROM NT TO NT AND NT TO GT WHICH IS EMBEDED BELOW FFL SHALL BE 75 Ø C I PIPE OR AS SPECIFIED.

20 NICHE FOR MCB DBS SHALL BE PROVIDED AT THE LOCATION DECIDED BY GE AT SITE AT THE TIME OF EXECUTION IF NOT SHOWN IN THE DRGS.

E/M

1 CONTRACTOR AND EXECUTIVE TO CHECK AND CO-RELATE ALL DRAWING BEFORE TAKING EXECUTION IN HAND.

2 INTERNAL ELECTRIFICATION FITTINGS/ ACCESORIES/ SWITCHES & WIRING ETC. SHALL BE LOCATED CLEAR OF DOORS/ WINDOWS.

3 INTERNAL ELECTRIFICATION WORK SHALL BE CARRIED OUT AS PER IS -732

4 LAYOUT OF INTERNAL ELECTRIFICATION HAS BEEN MARKED FOR ONE QTR. AND IT SHALL BE REPEATED SIMILARLY FOR OTHER QTRS. OF THE SAME TYPR/ CATEGORY. THE LAYOUT IS HOWEVER TENTATIVE & WORK SHALL BE FINALLY BE EXECUTED AS PER LAYOUT APPROVED BY GE AND NO PRICE ADJUSTMENT SHALL BE ADMISSIBLE ON THIS ACCOUNT.

5 MOUNTING HEIGHTS FOR VARIOUS ELECTRICAL FITTINGS/ FIXTURES ETC. SHALL BE AS PER IS-732/E-IN-C'S T.I. HOWEVER ALL SWITCHES/ SOCKET OUTLETS/ FAN REGULATORS SHALL BE MOUNTED IN SUCH WAY THAT THE BOTTOM OF SUNK TYPE BOX IS 1.0 M FROM FFL.

6 SCHEDULE OF WIRING
a) POINT WIRING - CONCEALED CONDUIT (RIGID PVC) TYPE AS PER IS-9537.

7 TELEPHONE CONDUIT (RIGID PVC, CONCEALED IN WALLS) DULY PRE-WIRED SHALL BE PROVIDED WITH TELEPHONE SOCKETS SUITABLE LOCATED AS SHOWN IN DRG.

8 RIGID PVC CONDUIT (20MM Ø) CONCEALED IN WALL IN SIDE THE QTR. AND RIGID STEEL CONDUIT (20MM Ø) FIXED TO WALL OUTSIDE THE QTR. SHALL BE PROVIDED FOR TV ANTENNA TERMINATING SUITABLY AS PER INSTRUCTION OF GE.

INT. W/S

1 FOLLOWING ITEMS ARE REQUIRED TO BE PROVIDED WITH EVERY SERVICE/OH TANK (OR AS SHOWN IN THE MAIN DRG. :-
I) OVERFLOW PIPE OF DIA EQUAL TO THE DIA OF INLET PIPE ,WITH MOSQUITO NET, ONE METRE PROJECTED FROM OUTER WALL OF THE BUILDING.

II) ONE WASH OUT PIPE WITH ONE BAND & PLUG FROM BOTTOM OF TANK TO 150 ABOVE THE ROOF. THE DIA OF WASH OUT PIPE WILL BE EQUAL TO THE DIA OF INLET.

III) ONE VENT PIPE OF 15 mmØ,CONNECTED WITH DISTRIBUTION PIPE LENGTH OF VENT PIPE WILL GO UP TO 100 HIGH ABOVE OH TANK.

IV) ONE VENT PIPE OF 15 mm Ø,CONNECTED FROM TOP OF GEYSER.THE LENGTH OF THIS VENT PIPE WILL GO UP TO 100 HIGH ABOVE OH TANK.

S NO	DATE	DESCRIPTION	INITIALS
REVISIONS			

ARCHITECTURAL NORMS AND GENERAL NOTES

DATE	12-01-15	CHIEF ENGINEER UDHAMPUR ZONE	SHT. NO. 2/2
DRN	GEETA		
TCD			
CKD			
SCALE		DRG. NO. CEUZ/TD/1545/15	
AAD (ARCH)		LT COL SENIOR ARCHITECT FOR CHIEF ENGINEER	
DY ARCH			

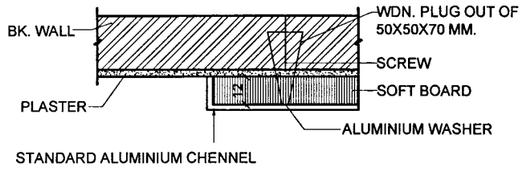

DETAIL AT 'A'
NOTICE BOARD / DISPLAY BOARD

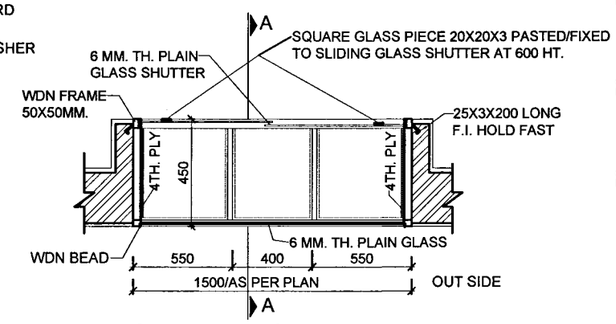

DISPLAY WINDOW

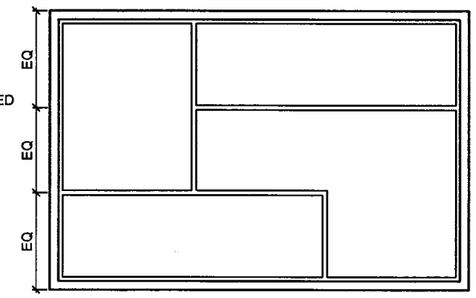

ELEVATION (DISPLAYING WINDOW)

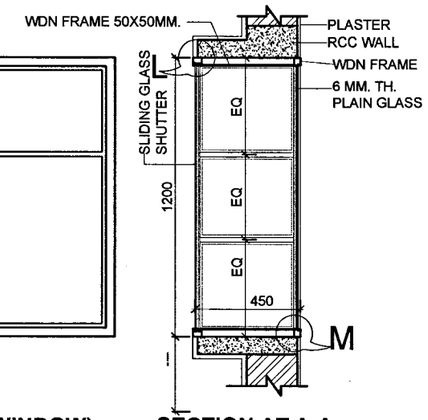

SECTION AT A-A

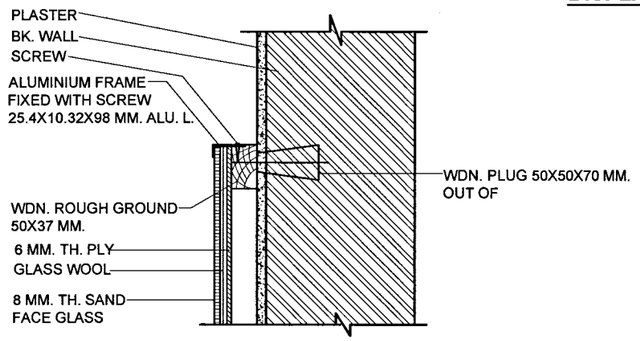

DETAIL AT 'C'

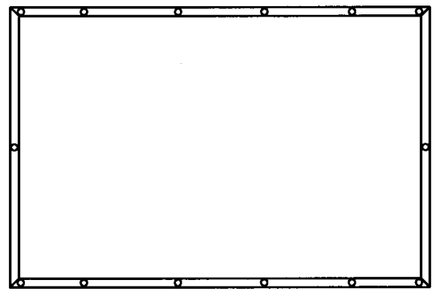

ELEVATION

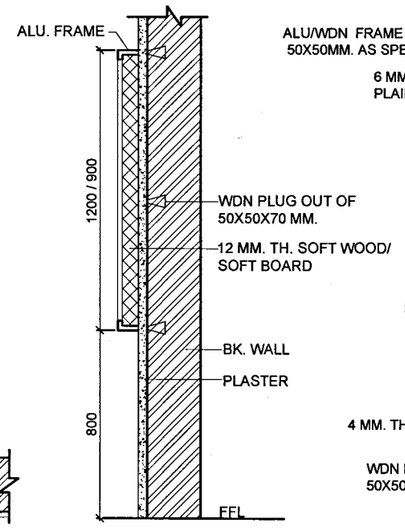

SECTION AT F-F

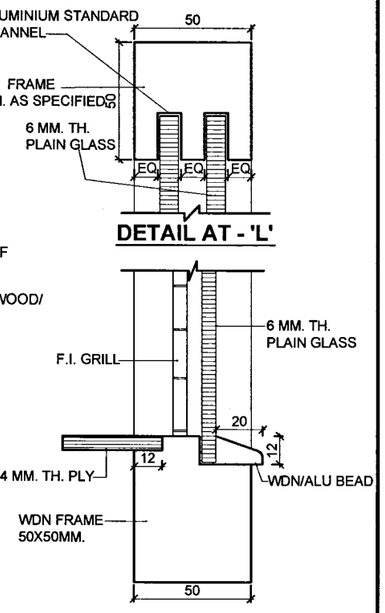

DETAIL AT - 'L'

DETAIL AT - 'M'

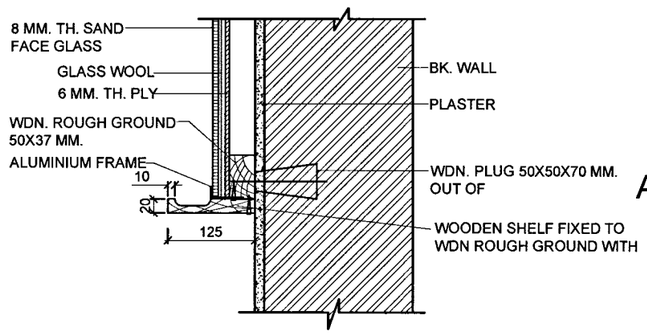

DETAIL AT 'B'

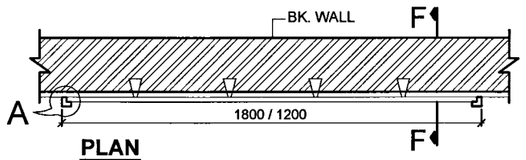

PLAN

NOTICE BOARD / DISPLAY BOARD FOR CLASS ROOM = 1800 X 1200
NOTICE BOARD / DISPLAY BOARD FOR DINING HALL = 1200 X 900

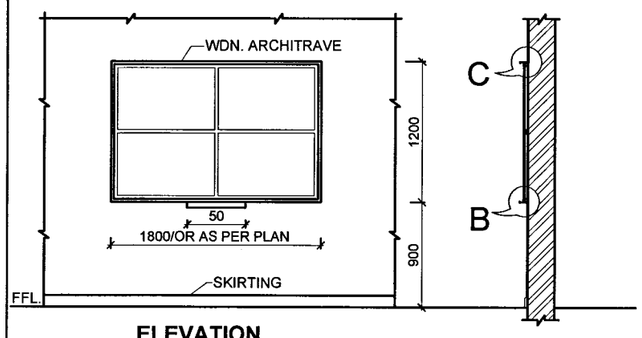

ELEVATION
DETAIL OF BLACK BOARD

SECTION

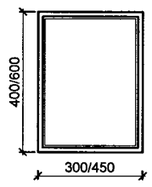

ELEVATION

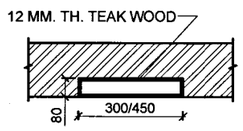

PLAN
DETAIL OF DUPLICATE KEY BOX

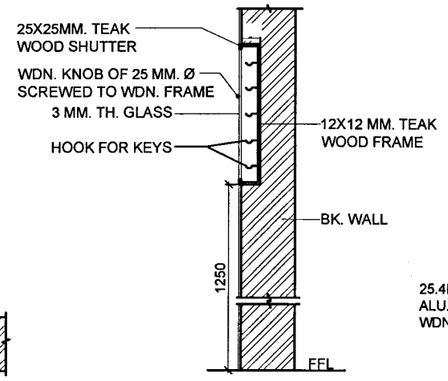

X - SECTION

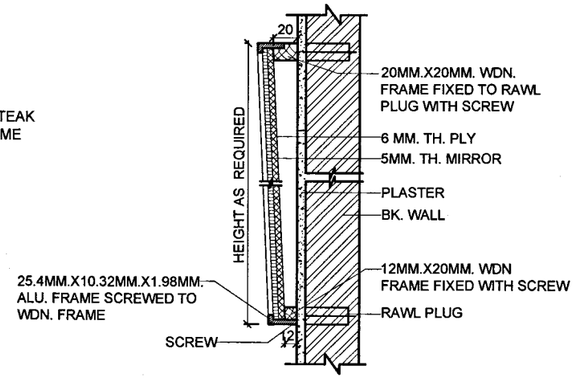

FIXING DETAIL OF LOOKING GLASS SIZE 10OCM.X120CM. AS PER PLAN

NOTES :-

1. CONTRACTOR TO CHECK & VERIFY ALL DIMENSIONS BEFORE EXECUTION OF THE WORK.
2. FIGURED DIMENSION SHALL BE FOLLOWED.
3. ALL DIM ARE IN MILIMETER UNLESS OTHERWISE SPECIFIED.
4. ALL EXPOSED WOOD WORK SHALL BE TREATED WITH SYNTHETIC ENAMEL PAINT AS SPECIFIED.

Sr. No.	DATE	DESCRIPTION

TYPICAL DETAIL FOR BLACK BOARD, LOOKING GLASS,DUPLICATE KEY BOX, NOTICE BOARD,DISPLAY BOARD & DISPLAY WINDOW

PLANS , ELEVATIONS , SECTIONS & DETAILS

DATE	12-01-15	CHIEF ENGINEER UDHAMPUR ZONE	SHT. NO. 1/2
DRN	GEETA		
TCD			
CKD			
SCALE		DRG. NO. CEUZ/TD/1547/15	

AAD (ARCH)

DY ARCH

LT. COL.
SENIOR ARCHITECT
FOR CHIEF ENGINEER

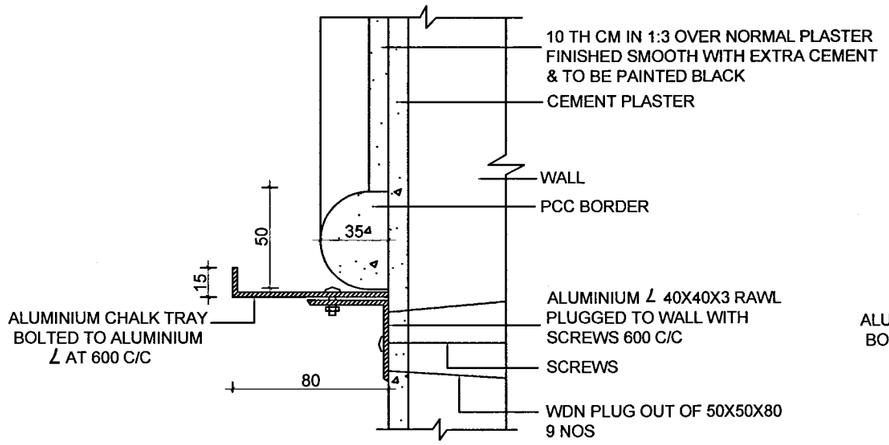

DETAIL AT (A)

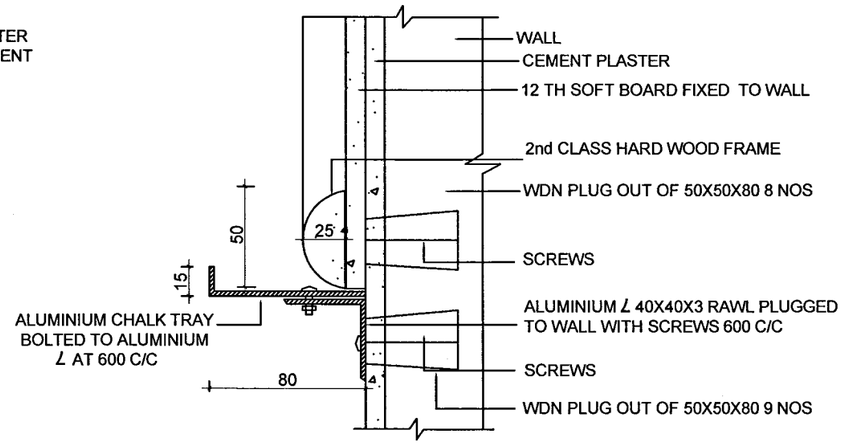

DETAIL AT (B)

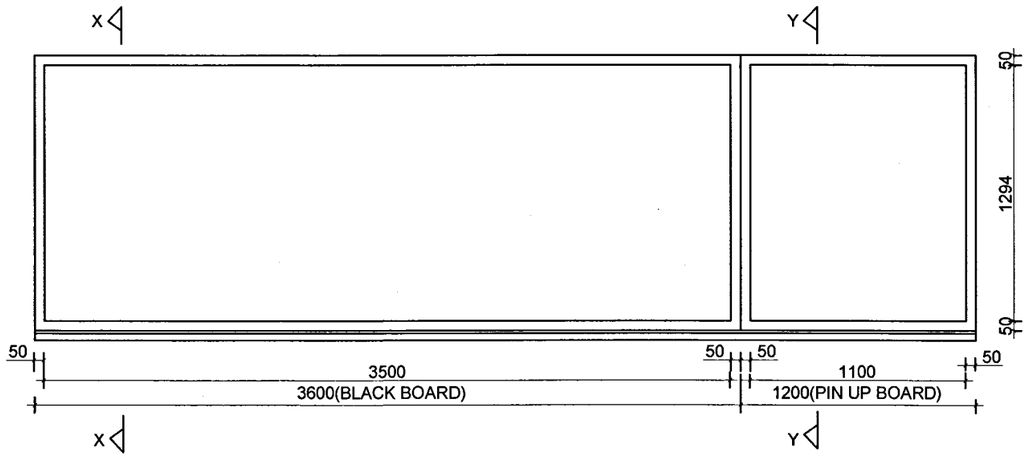

FRONT ELEVATION OF BLACK BOARD & PIN UP BOARD

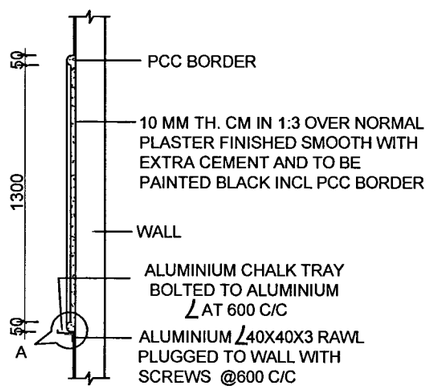

SECTION AT X-X

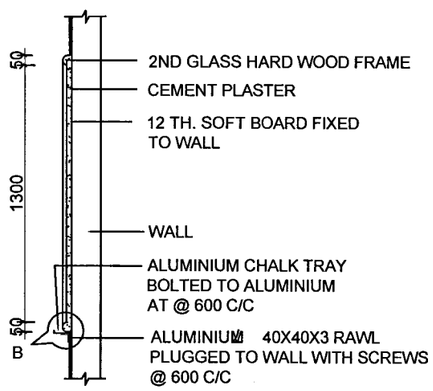

SECTION AT Y-Y

NOTES

1. ALL DIMENSIONS GIVEN ARE IN MILLIMETRES UNLESS OTHERWISE SHOWN IN DRAWING.
2. FIGURED DIMENSIONS SHALL BE FOLLOWED
3. CONTRACTOR TO CHECK & VERIFY ALL DIME -NSIONS BEFORE TAKING EXECUTION IN HAND.
4. ALL SIZE S GIVEN FOR WOOD WORK ARE FINISHED SIZES.
5. ALL EXPOSSED WOODEN SUREFACES SHALL BE FINISHED WITH FRENCH POLISH.
6. ALL HIDDEN SUREFACES OF WOOD WORK SHALL BE TREATED WITH TWO COATS OF HOT TAR.

TYPICAL DETAIL OF BLACK BOARD, PIN UP BOARD

DATE	12-01-15	CHIEF ENGINEER UDHAMPUR ZONE	SHT. NO. 2/2
DRN	GEETA		
TCD			
CKD			
SCALE		DRG. NO. CEUZ/TD/1547/15	
AAD (ARCH)		LT. COL. SENIOR ARCHITECT FOR CHIEF ENGINEER	
DY ARCH			

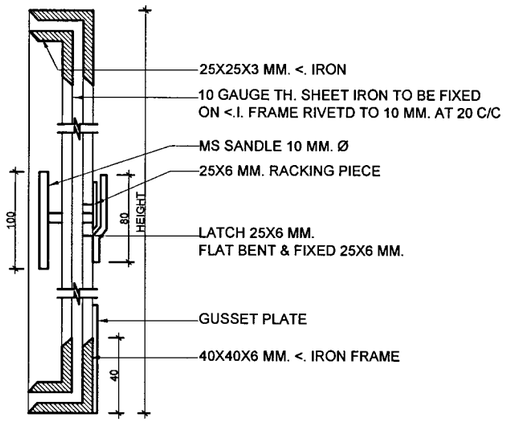

SECTION
DETAIL OF SHUTTER FOR FEED OPENING

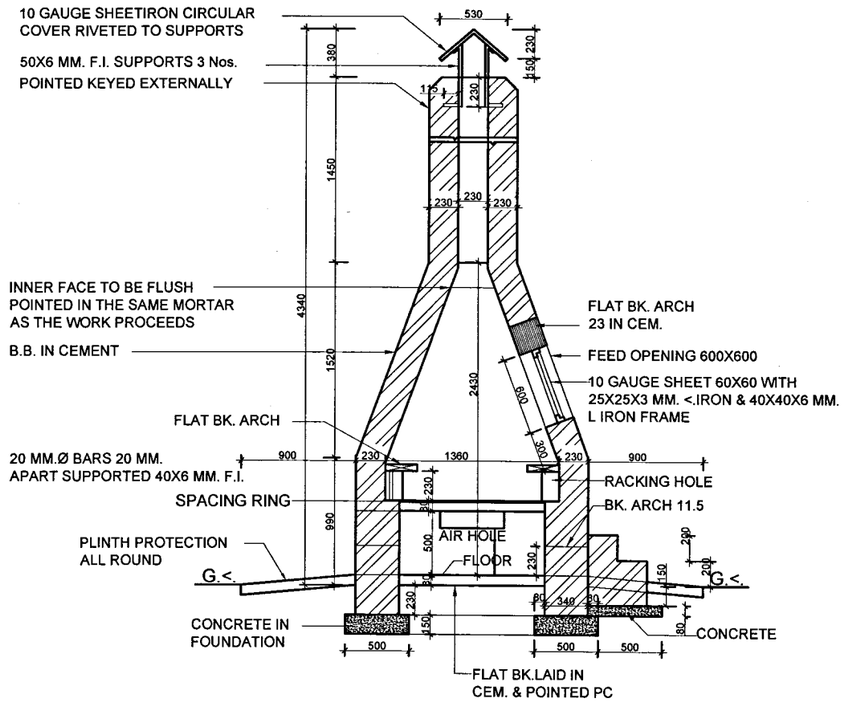

SECTION AT A-A
SCALE : 1:25

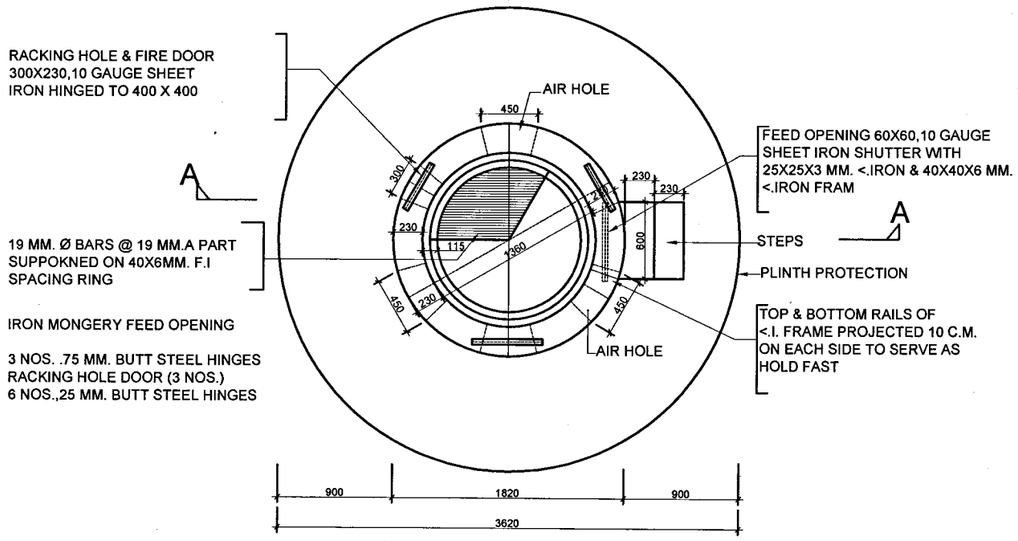

PLAN
SCALE : 1:25

NOTES :-

1. CONTRACTOR TO CHECK & VERIFY ALL DIMENSIONS BEFORE EXECUTION OF THE WORK.
2. FIGURED DIMENSION SHALL BE FOLLOWED.
3. ALL DIMENSIONS ARE GIVEN IN MILLIMETERS UNLESS OTHER WISE SHOWN.
4. LATCH & HANDLE TO BE PROVIDED TO EACH FIRE DOOR.

SL No.	DATE	DESCRIPTION	INITIALS

REVISIONS

INCINERATOR

PLANS, SECTIONS

DATE	12-01-15	CHIEF ENGINEER UDHAMPUR ZONE	SHT. NO. 1/2
DRN	GEETA		
TCD			
CKD			
SCALE		DRG. NO. CEUZ/TD/1549/15	

AAD (ARCH)

DY ARCH

LT. COL
SENIOR ARCHITECT
FOR CHIEF ENGINEER

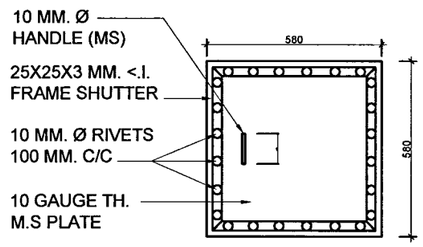

ELEVATION OF LID FOR FEED OPENING

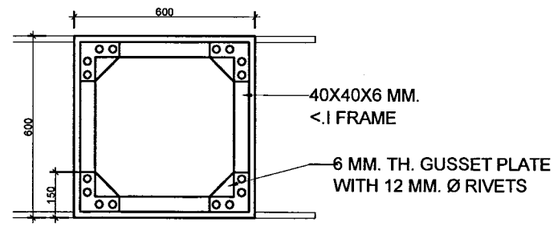

ELEVATION AFTER REMOVING LID FOR FEED OPENING

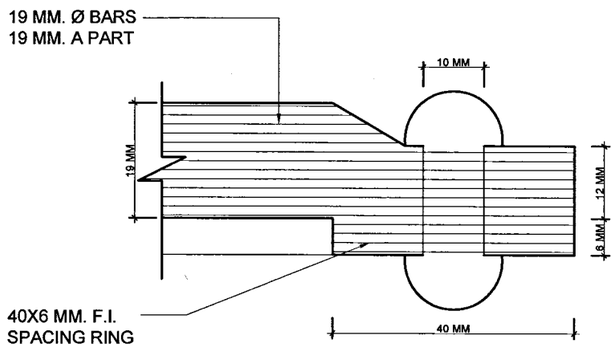

DETAIL AT 'X'
SCALE :- 1 : 1

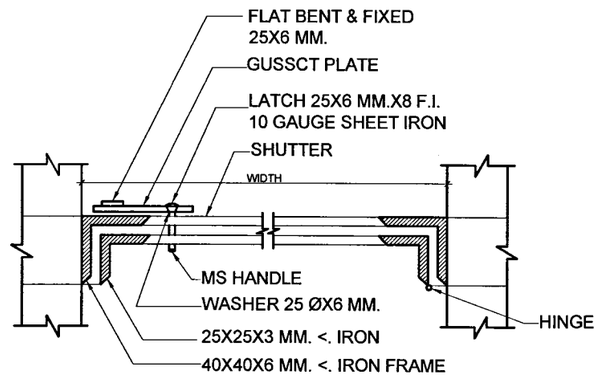

PLAN

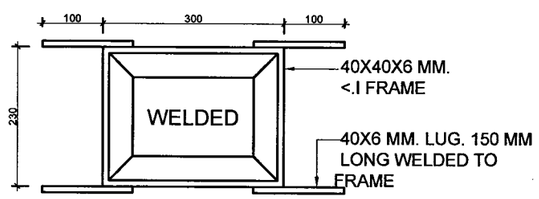

ELEVATION AFTER REMOVING LID RACK HOLES (SCALE :- 1 : 5)

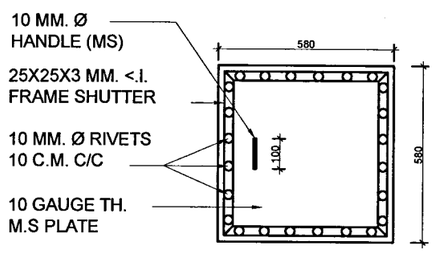

ELEVATION WITH LID DETAIL OF SHUTTER FOR RACKING HOLES, PLAN & SECTION SAME AS IN FEED OPENING SHUTTER

NOTES :-

1. FOR NOTES REF SHT NO- 1/2

Sr. No.	DATE	DESCRIPTION	INITIALS

REVISIONS

INCINERATOR

DETAILS

DATE	12-01-15	CHIEF ENGINEER UDHAMPUR ZONE	SHT. NO.
DRN	GEETA		2/2
TCD			
CKD			
SCALE		DRG. NO. CEUZ/TD/1549/15	
AAD (ARCH)		LT. COL SENIOR ARCHITECT FOR CHIEF ENGINEER	
DY ARCH			

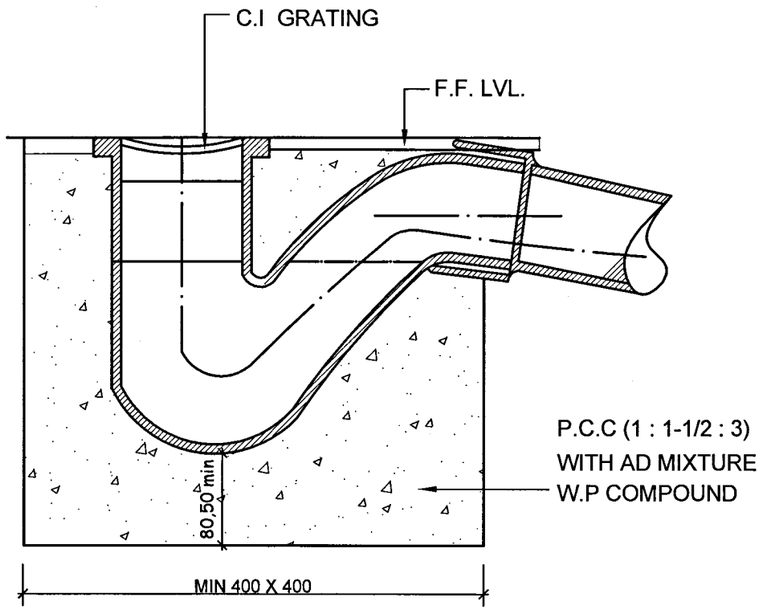

DETAIL OF FLOOR TRAP
SCALE 1:5

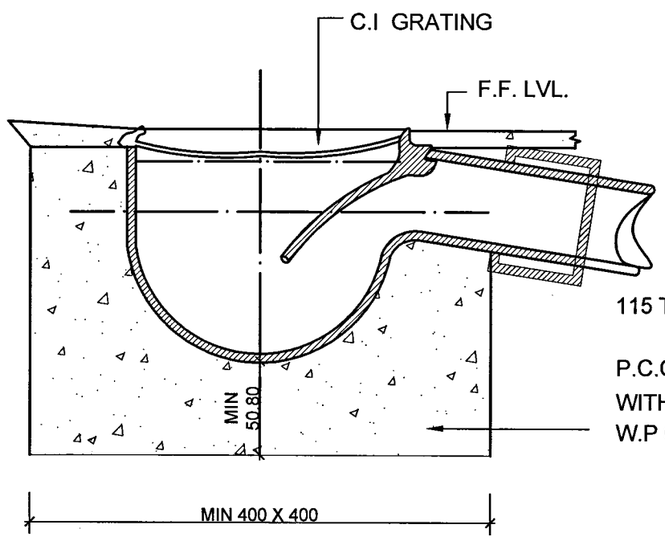

DETAIL OF NAHANI TRAP
SCALE 1:5

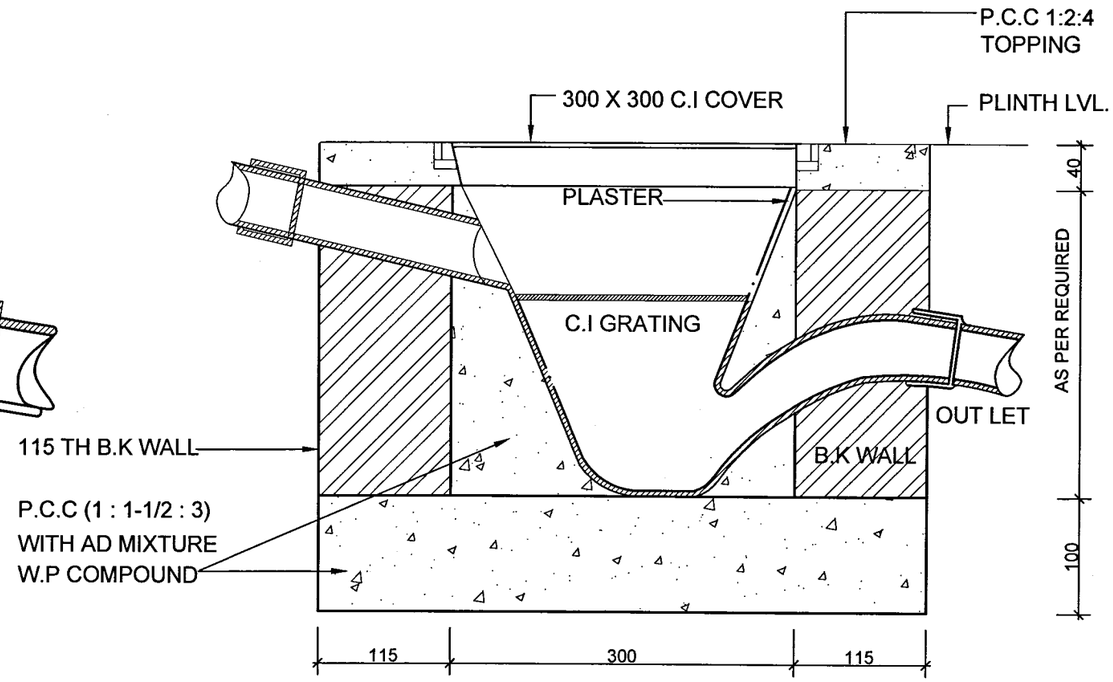

DETAIL OF GULLY TRAP
SCALE 1:10

NOTES :

1. CONTRACTOR TO CHECK AND VERIFY ALL THE DIMENSIONS BEFORE EXECUTION OF THE WORK.
2. FIGURED DIMENSIONS SHALL BE FOLLOWED.
3. ALL DIMENSIONS ARE GIVEN IN MILLIMETERS.

SNo.	DATE	DESCRIPTION	INITIAL

REVISIONS

DETAILS OF FLOOR TRAP NAHANI TRAP & GULLY TRAP

DATE	12-01-15	CHIEF ENGINEER UDHAMPUR ZONE	SHT. NO. 1/1
DRN	GEETA		
TCD			
CKD			
SCALE		DRG. NO. CEUZ/TD/1550/15	
AAD (ARCH)		LT. COL SENIOR ARCHITECT FOR CHIEF ENGINEER	
DY ARCH			

GENERAL NOTES :-

1. CONTRACTOR AND EXECUTIVE AUTHORITY TO CHECK AND VERIFY ALL DIMENSIONS BEFORE EXECUTION OF THE WORK.
2. ALL DIMENSIONS ARE GIVEN IN MILLIMETERS, UNLESS OTHER WISE SHOWN.
3. FIGURED DIMENSIONS SHALL BE FOLLOWED.
4. FOR EARTHQUAKE RESISTING FEATURES BUILDINGS ARE CATEGORIZED AS PER TABLE-1.
5. RECOMMENDED MORTAR MIXES AS PER TABLE - 2 OR EQUIVALENT SPECIFICATIONS SHALL BE USED FOR MASONRY CONSTRUCTION.
6. SEISMIC STRENGTHENING ARRANGEMENTS SHALL BE PROVIDE TO BUILDING AS PER TABLE - 3 IN SHT-2/5 FOR THE CATEGORY OF BUILDING AS APPLICABLE.
7. PLINTH BAND SHALL BE PROVIDED AT PLINTH LEVEL OF LOAD BEARING WALLS ON TOP OF FOUNDATION WALL , WHERE APPLICABLE PROVISION OF DPC SHALL BE DECIDED AS PER THE LEVEL OF PLINTH BAND.
8. LINTEL BAND SHALL BE PROVIDED CONTINUOUSLY AT LINTEL LEVEL ON ALL EXTERNAL, INTERNAL , AND CROSS WALLS (LOAD BEARING WALLS) WHERE APPLICABLE.
9. ROOF BAND SHALL BE PROVIDED IMMEDIATELY BELOW THE ROOF OR FLOORS SLABS ON ALL WALLS. IT NEED NOT BE PROVIDED ON THE TOP OF PANEL WALLS IN FRAMED STRUCTURE.
10. GABLE BAND SHALL BE PROVIDED OVER ALL GABLE ENDS SUITABLY TIED TO ROOF BAND (REF. FIG-2 AND FIG-2(A).
11. THE REINFORCEMENT OF PLINTH, LINTEL, ROOF AND GABLE BAND SHALL BE AS PER TABLE-4 AND SHALL BE MADE CONTINUOUS OVER THE BUILDING PLAN AT THAT LEVEL (FIG-1 AND FIG-2). BENDING DETAILS ARE GIVEN IN FIG-3.
12. VERTICAL REINFORCEMENT AT CORNERS AND JUNCTIONS OF WALLS SHALL BE PROVIDED AS PER TABLE- 5 AND SHALL BE EMBEDDED AT BOTTOM IN FOUNDATION CONCRETE AND EMBEDDED AT TOP IN ROOF BAND AND PASS THROUGH THE LINTEL BANDS AND FLOOR SLABS OR FLOOR LEVEL BANDS IN ALL STOREYS (FIG-4). BARS AT DIFFERENT STOREYS MAY BE WELDED OR SUITABLY LAPPED. THE REINFORCEMENT SHALL BE EMBEDDED IN CONCRETE AT BOTH. ENDS FOR DEVELOPMENT LENGTH OF THE BAR(Ld).
13. VERTICAL REINFORCEMENT AT JAMBS OF WINDOWS AND DOOR OPENINGS SHALL BE PROVIDED AS PER TABLE-5.
14. IN CASE THE SIZE AND LOCATION OF OPENING IN THE LOAD BEARING WALL DO NOT FULFILL THE REQUIREMENT OF CLAUSE 8.3.1 OF IS - 4326 : 2013, THE OPENING SHALL BE STRENGTHENED BY PROVIDING REINFORCEMENT CONCRETE ALL AROUND AS SHOWN IN FIG-5 ON SHT-4/5. THIS REINFORCEMENT SHALL BE IN ADDITION TO THAT MENTIONED IN NOTE NO-13.
15. MASONRY WORK SHALL BE REPLACED WITH RCC JAMB WITH FOUR NUMBERS 10# BARS AND 8 MM # TIES @200 MM C/C IN SITUATION WHERE THE LENGTH OF MASONRY WALL BETWEEN THE OPENING IS LESS THAN 500 MM OR OPENINGS ARE ADJACENT TO CORNER WALLS. (FIG-6(A) AND FIG-6(B)).
16. LINTEL BANDS AND PLINTH BANDS SHALL BE CONTINUOUS IN VERTICAL PLANE WHERE OPENINGS OCCUR AT DIFFERENT LEVELS(FIG-7).
17. ALL BANDS SHALL BE CAST IN CONCRETE OF M-25 DESIGN MIX.
18. VERTICAL REINFORCEMENT SHALL BE EMBEDDED INSIDE CONCRETE OF M-25 DESIGN MIX WITH 12.5 MM AGGREGATE TO ENSURE SAFETY FROM CORROSION AND GOOD BOND WITH MASONRY.
19. TO ACHIEVE ADEQUATE TOUGHNESS AND DUCTILITY TO RESIST SEVERE EARTHQUAKE SHOCKS, ADDITIONAL PROVISIONS AS GIVEN IN THE SUCCEEDING PARAGRAPHS SHALL BE ADOPTED FOR ALL REINFORCED CONCRETE STRUCTURE, WHICH ARE LOCATED IN SEISMIC ZONE THREE, FOUR OR FIVE.

(a) MAXIMUM SPACING OF STIRRUPS OVER A LENGTH OF 2d AT EITHER END OF A BEAM SHALL NOT EXCEED d/4 OR 8 TIMES THE DIA OF THE SMALLEST LONGITUDINAL BAR. HOWEVER, IT NEED NOT BE LESS THAN 100 MM UNLESS OTHERWISE SHOWN LESS IN MAIN STRUCTURAL DRG. THIS FIRST STIRRUP SHALL BE AT A DISTANCE NOT EXCEEDING 50 MM FROM THE JOINT FACE. ELSEWHERE THE BEAM SHALL HAVE VERTICAL STIRRUPS AT A SPACING NOT EXCEEDING d/2 WHERE d IS THE EFFECTIVE DEPTH OF THE BEAM (REFER FIG-8). THE STIRRUPS SHALL HAVE 135^0 HOOK WITH A 6 TIMES DIA EXTENSION BUT NOT LESS THAN 75 MM(REF, FIG-8 (A))

(b) IN AN EXTERNAL BEAM COLUMN JOINT, BOTH THE TOP AND THE BOTTOM BARS SHALL BE PROVIDED WITH THE ANCHORAGE LENGTH BEYOND THE INNER FACE OF THE COLUMN EQUAL TO THE DEVELOPMENT LENGTH IN TENSION PLUS 10 TIMES THE BAR DIA (REF. FIG-8).

(c) SPECIAL CONFINING REINFORCEMENT IN COLUMN SHALL BE PROVIDED OVER A LENGTH L_0 FROM EACH JOINT FACE (L_0 EQUAL TO LARGER LATERAL DIMENSION OF THE MEMBER, OR1/6 OF THE CLEAR SPAN OF THE MEMBER OR 450 MM WHICHEVER IS MORE), (REF . FIG-9).

(d) LAP SPLICES SHALL BE PROVIDED ONLY IN THE CENTRAL HALF OF THE COLUMN LENGTH. HOOPS SHALL BE PROVIDED OVER THE ENTIRE SPLICE LENGTH AT SPACING NOT EXCEEDING 150 MM C/C. NOT MORE THAN 50% OF BARS SHALL BE SPLICED AT ONE SECTION.

(e) SPECIAL CONFINING REINFORCEMENT AS REQUIRED AT THE END OF COLUMN SHALL BE PROVIDED THROUGH THE JOINT AS WELL UNLESS THE JOINT HAS BEAMS FRAMING INTO ALL VERTICAL FACES OF JOINT AND WHERE EACH BEAM WIDTH IS AT LEAST $\frac{3}{4}$ OF COLUMN WIDTH. IN THE LATER CASE, SPECIAL CONFINING REINFORCEMENT MAY BE REDUCED TO HALF BUT SPACING SHOULD NOT BE LESS THAN 150 MM C/C.

(f) WHEN A COLUMN TERMINATES INTO A FOOTING, SPECIAL CONFINING REINFORCEMENT AS PROVIDED IN LENGTH L_0 SHALL BE EXTENDED AT LEAST 300 MM INTO THE FOOTING (REF. FIG-10)

(g) IN CASE OF BEAMS, THE LONGITUDINAL BARS SHALL BE SPLICED, ONLY IF HOOPS ARE PROVIDED OVER THE ENTIRE SPLICE LENGTH, AT A SPACING NOT EXCEEDING 150 MM (REF . FIG-11). THE LAP LENGTH SHALL NOT BE LESS THAN THE BAR DEVELOPMENT LENGTH IN TENSION. LAP SPLICES SHALL NOT BE PROVIDED (a) WITHIN A JOINT, (b) WITHIN A DISTANCE OF 2 d FROM JOINT FACE, AND (c) WITHIN A QUARTER LENGTH OF MEMBER WHERE FLEXUAL YIELDING MAY GENERALLY OCCUR UNDER THE EFFECT OF EARTHQUAKE FORCE. NOT MORE THAN 50% OF THE BARS SHALL BE SPLICED AT ONE SECTION.

NOTES:-

1. SPAN SHALL BE CENTER TO CENTER DISTANCE BETWEEN WALLS, COLUMNS OR BUTTRESSES.
2. WIDTH OF RCC BAND SHALL BE SAME AS THE THICKNESS OF THE WALL.
3. THE VERTICAL THICKNESS OF RCC BAND SHALL BE KEPT AS 75 MM MIN. WHERE FOUR BARS ARE SPECIFIED (FIG-3)
4. IN CASE OF RCC BANDS, LONGITUDINAL BARS SHALL BE HELD IN POSITION BY LATERAL TIES OF 8 MM DIA SPACED AT 150 MM C/C.
5. THIS DRG. IS BASED ON I S : 4326-2013 AND I S : 13920 - 2016.
6. THE REINFORCEMENT BARS SHALL BE TMT STEEL Fe 500D (MEETING ALL THE REQUIREMENTS OF I S - 1786) AS APPLICABLE AS PER MAIN STRUCTURAL DRAWINGS.
7. GENERAL NOTES :- 7,8,9,10 NOT APPLICABLE FOR SMRF RCC STRUCTURES.

S NO	DATE	DESCRIPTION	INITIAL
		REVISION	

TYPICAL DETAILS OF SEISMIC PROVISIONS

GENERAL NOTES

DATE	01.04.2021	CHIEF ENGINEER UDHAMPUR ZONE	SH NO 1/5
DRN	SUB A. SHABEER		
DES	LT COL UDIT NEGI		
DF NO			
SCALE	AS SHOWN	DRG NO : CEUZ/TD-1584/2021	

SO-1 (DESIGN)
FOR CHEF ENGINEER

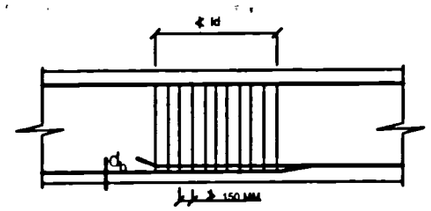

Ld = DEVELOPMENT LENGTH
d_b = BAR DIA

FIG - 11 :- LAP SPLICE IN BEAM

TABLE - 1 : BUILDING CATEGORIES FOR EARTHQUAKE RESISTANT FEATURES

IMPORTANCE FACTOR	SEISMIC ZONE			
	II	III	IV	V
1.0	B	C	D	E
1.5	C	D	E	E

NOTE : C[illegible] IS N[illegible] W DEFUNCT AS ZONE I [illegible] DOES NOT EXIST A[illegible] [illegible]ORE

TABLE - 2 : RECOMMENDED MORTAR MIXES

SL. No (1)	BUILDING CATEGORIES (2)	SL.No AS GIVEN IN TABLE 1 OF IS 1905 (3)	GRADE OF MORTAR (4)	MIX PROPORTIONS (BY LOOSE VOLUME) (5)	(6)	(7)	MINIMUM COMPRESSIVE STRENGTH AT 28 DAYS N/mm (8)
I	E	2(a)	H2	1	1/4 C or B	4	7.5
		2(b)	—	1	1/2 C or B	4 1/2	6.0
II	D	3(a)	M1	1	———	5	5.0
		3(B)	—	1	1C or B	6	3.0
III	C	4(a)	M2	1	———	6	3.0
		4(b)	—	1	2 B	9	2.0
IV	B	5(a)	M3	1	———	7	1.5
		5(b)	—	1	3 B	12	1.5

TABLE - 3 : STRENGTHENING ARRANGEMENT RECOMMENDED FOR MASONRY BUILDING (RECTANGULAR MASONRY UNITS)

SL. No (1)	BUILDING CATEGORIES (2)	NUMBER OF STOREYS (3)	STRENGTHENING TO BE PROVIDED IN ALL STOREYS (4)
I	B	a) 1 TO 3 b) 4	a, b, c, f, g a, b, c, f, g
II	C	a) 1 AND 2 b) 3 AND 4	a, b, c, f, g a to g
III	D	a) 1 AND 2 b) 3 AND 4	a to g a to h
IV	E	1 TO 3[1)]	a to h

WHERE	
a	MASONRY MORTAR (TABLE-2)
b	LINTEL BAND
c	ROOF/ FLOOR BAND AND GABLE BAND WHERE NECESSARY
d	VERTICAL STEEL AT CORNERS AND JUNCTION OF WALL
e	VERTICAL STEEL AT JAMBS OF OPENINGS
f	BRACING IN PLAN AT TIE LEVEL OF TRUSSED ROOFS
g	PLINTH BAND
h	DOWEL BARS

TABLE - 4 : RECOMMENDED LONGITUDINAL STEEL (TMT BARS) IN REINFORCEMENT CONCRETE BANDS

SPAN IN METERS	BUILDING CATEGORIES							
	B		C		D		E	
	NO OF BARS	DIA # (MM)	NO OF BARS	DIA # (MM)	NO OF BARS	DIA # (MM)	NO OF BARS	DIA # (MM)
5 OR LESS	2	8	2	8	2	8	2	10
6	2	8	2	8	2	10	2	12
7	2	8	2	10	2	12	4	10
8	2	10	2	12	4	10	4	12

TABLE - 5 : VERTICAL STEEL REINFORCEMENT IN MASONRY WALLS WITH RECTANGULAR MASONRY UNITS

SL. No (1)	NO. OF STOREYS (2)	STOREY (3)	DIAMETER OF HSD SINGLE BARAT EACH CRITICAL SECTION, MM			
			CATE-GORY B (4)	CATE-GORY C (5)	CATE-GORY D (6)	CATE-GORY E (7)
(I)	ONE	—	NIL	NIL	10	12
(II)	TWO	a) TOP	NIL	NIL	10	12
		b) BOTTOM	NIL	NIL	12	16
(III)	THREE	a) TOP	NIL	10	10	12
		b) MIDDLE	NIL	10	12	16
		c) BOTTOM	NIL	12	12	16
(IV)	FOUR	a) TOP	10	10	10	FOUR STORIED BUILDING NOT PERMITTED
		b) THIRD	10	10	12	
		c) SECOND	10	12	16	
		d) BOTTOM	12	12	20	

S NO	DATE	DESCRIPTION	INITIAL
REVISION			

TYPICAL DETAILS OF SEISMIC PROVISIONS

TABLES OF BUILDING CATEGORY AND STRENGTHENING, MEASURES

DATE	01.04.2021	CHIEF ENGINEER UDHAMPUR ZONE	SH NO 2/5
DRN	SUB A. SHABEER		
DES	LT COL UDIT NEGI		
DF NO			
SCALE	AS SHOWN	DRG NO : CEUZ/TD-1584/2021	

SO-1 (DESIGN)
FOR CHEF ENGINEER

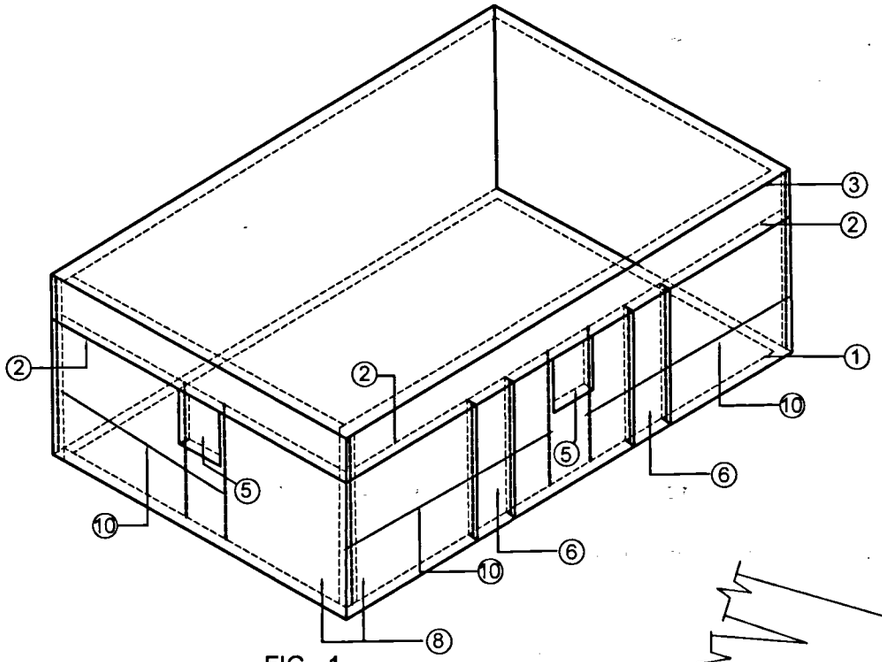

FIG - 1
OVERALL ARRANGEMENT OF
REINFORCING MASONRY BUILDING

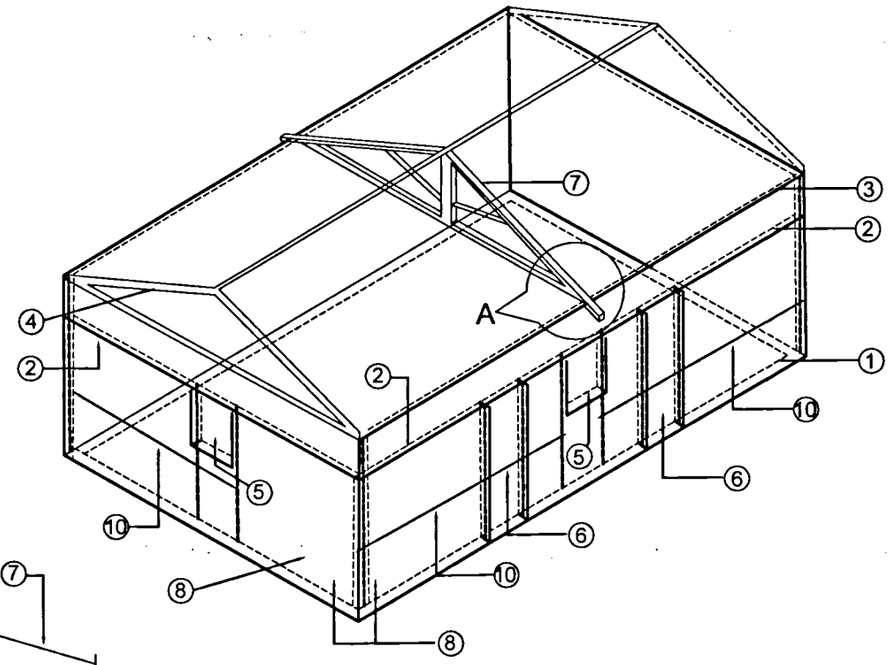

FIG - 2
OVERALL ARRANGEMENT OF REINFORCING
MASONRY HAVING PITCHED ROOF BUILDING

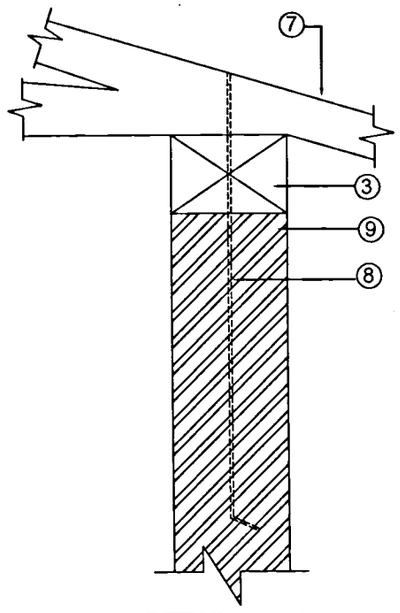

DETAIL AT - 'A'

1. PLINTH BAND
2. LINTEL BAND
3. FLOOR / ROOF / TIE LEVEL BAND
4. GABLE BAND
5. WINDOW
6. DOOR
7. RAFTER
8. WALL
9. HOLDING DOWN BOLT
10. VERTICAL BAR

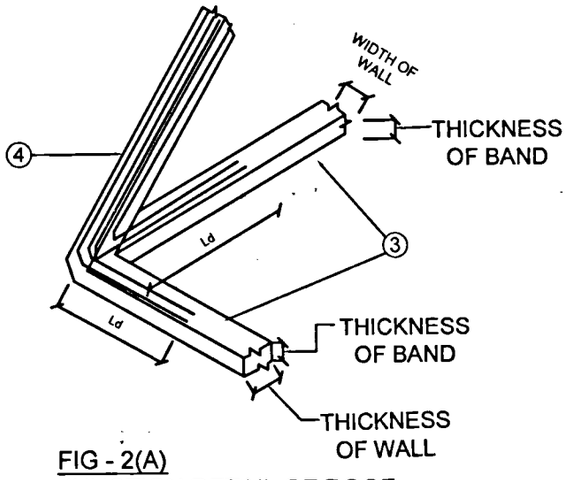

FIG - 2(A)
JUNCTION DETAIL OF ROOF
AND GABLE BAND

NOTE:- DETAILING OF REINFORCEMENT FOR TIE LEVEL (ROOF) BAND AS PER FIG - 3

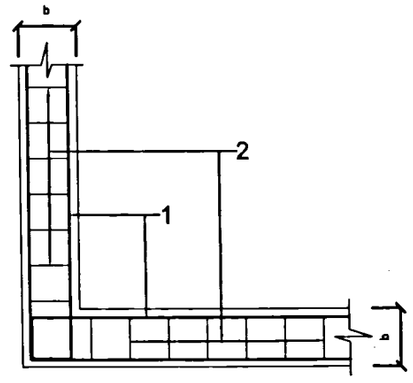

STRUCTURAL PLAN AT
CORNER JUNCTION
(c)

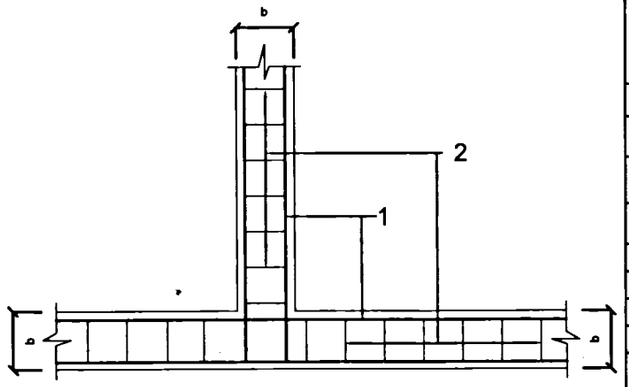

STRUCTURAL PLAN AT
JUNCTION OF WALL
(d)

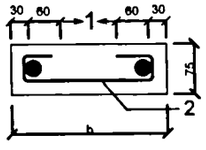

SECTION OF BAND
WITH TWO BARS
(a)

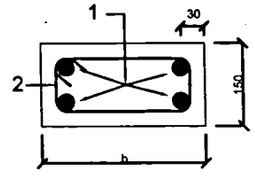

SECTION OF BAND
WITH FOUR BARS
(b)

1. LONGITUDINAL BARS
2. LATERAL TIES
b. WALL THICKNESS

FIG - 3
REINFORCEMENT AND BENDING DETAIL IN R C C BANDS

S NO	DATE	DESCRIPTION	INITIAL
REVISION			

TYPICAL DETAILS OF SEISMIC PROVISIONS

FIG-1, FIG-2, FIG-2 (A) AND FIG-3

DATE	01.04.2021	CHIEF ENGINEER UDHAMPUR ZONE	SH NO 3/5
DRN	SUB A. SHABEER		
DES	LT COL UDIT NEGI		
DF NO			
SCALE	AS SHOWN	DRG NO : CEUZ/TD-1584/2021	

SO-1 (DESIGN)
FOR CHEF ENGINEER

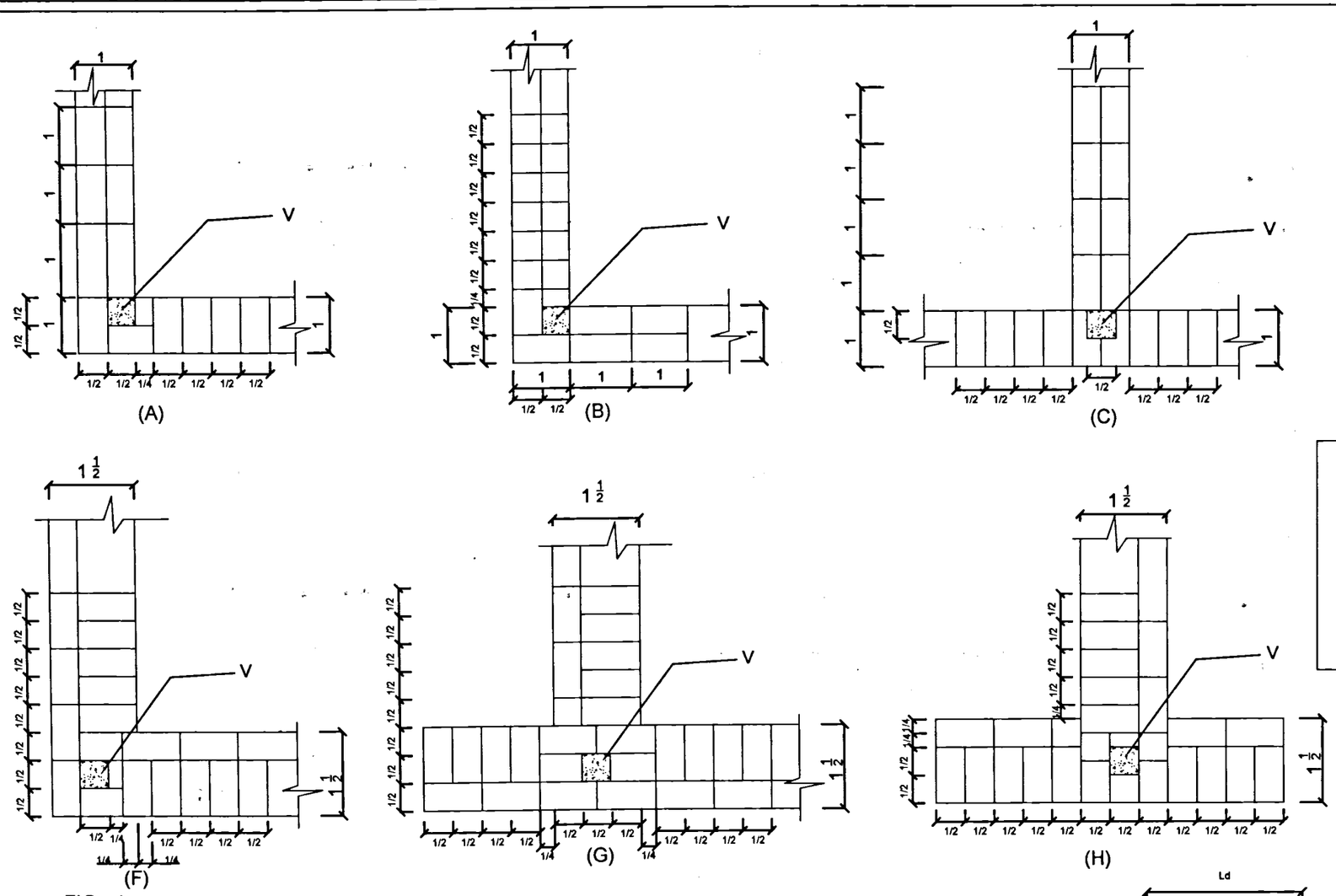

1 - ONE BRICK LENGTH
½ - HALF BRICK LENGTH
V - VERTICAL STEEL BAR WITH CONCRETE FILLING IN POCKET
(A)&(B) - ALTERNATE COURSES AT CORNER JUNCTION OF 1 BRICK WALL
(C)&(D) - ALTERNATE COURSES AT T - JUNCTION OF 1 BRICK WALL
(E)&(F) - ALTERNATE COURSES AT CORNER JUCTION OF 1½ BRICK WALL
(G)&(H) - ALTERNATE COURSES AT T - JUNCTION OF 1½ BRICK WALL

FIG - 4
TYPICAL DETAILS OF PROVIDING VERTICAL STEEL BARS IN BRICK MASONRY

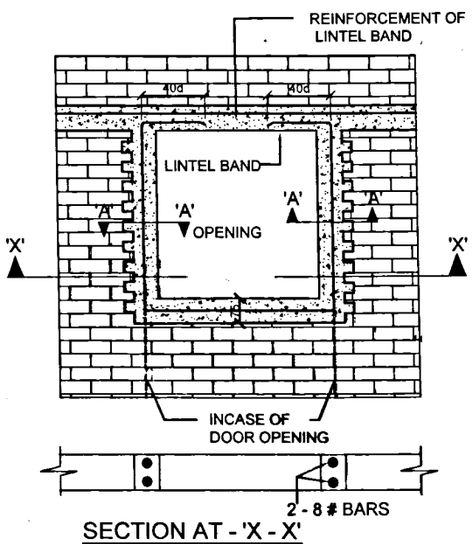

SECTION AT - 'X - X'

FIG - 5
STRENGTHENING MASONRY AROUND OPENING

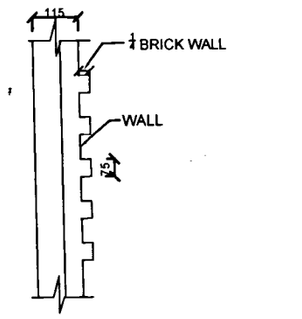

SECTION AT - 'A - A'

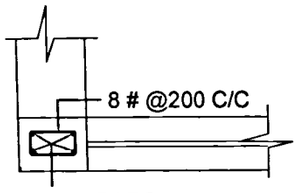

FIG - 6(B)
OPENING ADJACENT TO CORNER WALLS

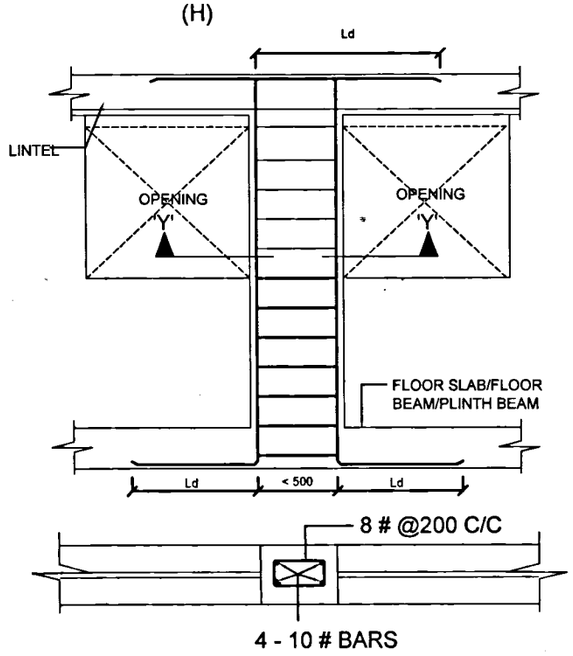

SECTION AT - 'Y - Y'

FIG - 6(A)
DETAIL OF RCC JAMB

S NO	DATE	DESCRIPTION	INITIAL
REVISION			

TYPICAL DETAILS OF SEISMIC PROVISIONS

FIG-4, FIG-5, FIG-6 (A) AND FIG-6 (B)

DATE	01.04.2021	CHIEF ENGINEER UDHAMPUR ZONE	SH NO 4/5
DRN	SUB A. SHABEER		
DES	LT COL UDIT NEGI		
DF NO			
SCALE	AS SHOWN	DRG NO: CEUZ/TD-1584/2021	

SO-1 (DESIGN)
FOR CHEF ENGINEER